República Argentina - Poder Ejecutivo Nacional
AÑO DE LA DEFENSA DE LA VIDA, LA LIBERTAD Y LA PROPIEDAD

Disposición

Número: DI-2024-1575-APN-ANMAT#MS

CIUDAD DE BUENOS AIRES
Miércoles 14 de Febrero de 2024

Referencia: 1-0047-3110-000229-24-4

VISTO el Expediente Nº 1-0047-3110-000229-24-4 del Registro de esta Administración Nacional de Medicamentos, Alimentos y Tecnología Médica (ANMAT), y:
CONSIDERANDO:

Que por las presentes actuaciones FOC S.R.L. solicita se autorice la inscripción en el Registro Productores y Productos de Tecnología Médica (RPPTM) de esta Administración Nacional, de un nuevo producto médico.

Que las actividades de elaboración y comercialización de productos médicos se encuentran contempladas por la Ley 16463, el Decreto 9763/64, y MERCOSUR/GMC/RES. Nº 40/00, incorporada al ordenamiento jurídico nacional por Disposición ANMAT Nº 2318/02 (TO 2004), y normas complementarias.

Que consta la evaluación técnica producida por el Instituto Nacional de Productos Médicos, en la que informa que el producto estudiado reúne los requisitos técnicos que contempla la norma legal vigente, y que los establecimientos declarados demuestran aptitud para la elaboración y el control de calidad del producto cuya inscripción en el Registro se solicita.

Que corresponde autorizar la inscripción en el RPPTM del producto médico objeto de la solicitud.

Que se actúa en virtud de las facultades conferidas por el Decreto N° 1490/92 y sus modificatorios.

Por ello;

LA ADMINISTRADORA NACIONAL DE LA ADMINISTRACIÓN NACIONAL

DE MEDICAMENTOS, ALIMENTOS Y TECNOLOGÍA MÉDICA

DISPONE:

ARTÍCULO 1º.- Autorízase la inscripción en el Registro Nacional de Productores y Productos de Tecnología Médica (RPPTM) de la Administración Nacional de Medicamentos, Alimentos y Tecnología Médica (ANMAT) del producto médico marca LeoMed nombre descriptivo Esfinterótomo y nombre técnico Esfinteroscopios , de acuerdo con lo solicitado por FOC S.R.L. , con los Datos Identificatorios Característicos que figuran al pie de la presente.

ARTÍCULO 2º.- Autorízanse los textos de los proyectos de rótulo/s y de instrucciones de uso que obran en documento N° IF-2024-12839666-APN-DVPCYAR#ANMAT .

ARTÍCULO 3º.- En los rótulos e instrucciones de uso autorizados deberá figurar la leyenda "Autorizado por la ANMAT PM 1737-37 ", con exclusión de toda otra leyenda no contemplada en la normativa vigente.

ARTICULO 4°.- Extiéndase el Certificado de Autorización e Inscripción en el RPPTM con los datos característicos mencionados en esta disposición.

ARTÍCULO 5º.- La vigencia del Certificado de Autorización será de cinco (5) años, a partir de la fecha de la presente disposición.

ARTÍCULO 6º.- Regístrese. Inscríbase en el Registro Nacional de Productores y Productos de Tecnología Médica al nuevo producto. Por el Departamento de Mesa de Entrada, notifíquese al interesado, haciéndole entrega de la presente Disposición, conjuntamente con rótulos e instrucciones de uso autorizados y el Certificado mencionado en el artículo 4°.

Gírese a la Dirección de Gestión de Información Técnica a los fines de confeccionar el legajo correspondiente.

Cumplido, archívese.

DATOS IDENTIFICATORIOS CARACTERÍSTICOS

PM: 1737-37

Nombre descriptivo: Esfinterótomo

Código de identificación y nombre técnico del producto médico, (ECRI-UMDNS):
15-787 Esfinteroscopios

Marca(s) de (los) producto(s) médico(s): LeoMed

Modelos:
SD0420N; SD0425N; SD0430N; SD0435N; SD0720N; SD0725N; SD0730N; SD0735N; SD1020N; SD1025N; SD1030N; SD1035N; SD1520N; SD1525N; SD1530N; SD1535N; SD3020N; SD3025N; SD3030N; SD3035N; ST0420N; ST0425N; ST0430N; ST0435N; ST0720N; ST0725N; ST0730N; ST0735N; ST1020N; ST1025N;

ST1030N; ST1035N; ST1520N; ST1525N; ST1530N; ST1535N; ST3020N; ST3025N; ST3030N; ST3035N;
SD0420NGW0206; SD0425NGW0206; SD0430NGW0206; SD0435NGW0206; SD0720NGW0206;
SD0725NGW0206; SD0730NGW0206; SD0735NGW0206; SD1020NGW0206; SD1025NGW0206;
SD1030NGW0206; SD1035NGW0206; SD1520NGW0206; SD1525NGW0206; SD1530NGW0206;
SD1535NGW0206; SD3020NGW0206; SD3025NGW0206; SD3030NGW0206; SD3035NGW0206;
SD0420NGW0209; SD0425NGW0209; SD0430NGW0209; SD0435NGW0209; SD0720NGW0209;
SD0725NGW0209; SD0730NGW0209; SD0735NGW0209; SD1020NGW0209; SD1025NGW0209;
SD1030NGW0209; SD1035NGW0209; SD1520NGW0209; SD1525NGW0209; SD1530NGW0209;
SD1535NGW0209; SD3020NGW0209; SD3025NGW0209; SD3030NGW0209; SD3035NGW0209;
SD0420NGW0204; SD0425NGW0204; SD0430NGW0204; SD0435NGW0204; SD0720NGW0204;
SD0725NGW0204; SD0730NGW0204; SD0735NGW0204; SD1020NGW0204; SD1025NGW0204;
SD1030NGW0204; SD1035NGW0204; SD1520NGW0204; SD1525NGW0204; SD1530NGW0204;
SD1535NGW0204; SD3020NGW0204; SD3025NGW0204; SD3030NGW0204; SD3035NGW0204;
SD0420NGW0208; SD0425NGW0208; SD0430NGW0208; SD0435NGW0208; SD0720NGW0208;
SD0720NGW0208; SD0730NGW0208; SD0735NGW0208; SD1020NGW0208; SD1025NGW0208;
SD1030NGW0208; SD1035NGW0208; SD1520NGW0208; SD1525NGW0208; SD1530NGW0208;
SD1535NGW0208; SD3020NGW0208; SD3025NGW0208; SD3030NGW0208; SD3035NGW0208;
SD0420NGW0217; SD0425NGW0217; SD0430NGW0217; SD0435NGW0217; SD0720NGW0217;
SD0725NGW0217; SD0730NGW0217; SD0735NGW0217; SD1020NGW0217; SD1025NGW0217;
SD1030NGW0217; SD1035NGW0217; SD1520NGW0217; SD1525NGW0217; SD1530NGW0217;
SD1535NGW0217; SD3020NGW0217; SD3025NGW0217; SD3030NGW0217; SD3035NGW0217;
SD0420NGW0218; SD0425NGW0218; SD0430NGW0218; SD0435NGW0218; SD0720NGW0218;
SD0725NGW0218; SD0730NGW0218; SD0735NGW0218; SD1020NGW0218; SD1025NGW0218;
SD1030NGW0218;SD1035NGW0218; SD1520NGW0218; SD1525NGW0218; SD1530NGW0218;
SD1535NGW0218; SD3020NGW0218; SD3025NGW0218; SD3030NGW0218; SD3035NGW0218;
SD0420NGW0220; SD0425NGW0220; SD0430NGW0220; SD0435NGW0220; SD0720NGW0220;
SD0725NGW0220; SD0730NGW0220; SD0735NGW0220; SD1020NGW0220; SD1025NGW0220;
SD1030NGW0220; SD1035NGW0220; SD1520NGW0220; SD1525NGW0220; SD1530NGW0220;
SD1535NGW0220; SD3020NGW0220; SD3025NGW0220; SD3030NGW0220; SD3035NGW0220;
SD0420NGW0221; SD0425NGW0221; SD0430NGW0221; SD0435NGW0221; SD0720NGW0221;
SD0725NGW0221; SD0730NGW0221; SD0735NGW0221; SD1020NGW0221; SD1025NGW0221;
SD1030NGW0221; SD1035NGW0221; SD1520NGW0221; SD1525NGW0221; SD1530NGW0221;
SD1535NGW0221; SD3020NGW0221; SD3025NGW0221; SD3030NGW0221; SD3035NGW0221;
SD0420NGW0228; SD0425NGW0228; SD0430NGW0228; SD0435NGW0228; SD0720NGW0228;
SD0725NGW0228; SD0730NGW0228; SD0735NGW0228; SD1020NGW0228; SD1025NGW0228;
SD1030NGW0228; SD1035NGW0228; SD1520NGW0228; SD1525NGW0228; SD1530NGW022§;
SD1535NGW0228; SD3020NGW0228; SD3025NGW0228; SD3030NGW0228; SD3035NGW0228;
SD0420NGW0230; SD0425NGW0230; SD0430NGW0230; SD0435NGW0230; SD0720NGW0230;
SD0725NGW0230; SD0730NGW0230; SD0735NGW0230; SD1020NGW0230; SD1025NGW0230;
SD1030NGW0230; SD1035NGW0230; SD1520NGW0230; SD1525NGW0230; SD1530NGW0230;
SD1535NGW0230; SD3020NGW0230; SD3025NGW0230; SD3030NGW0230; SD3035NGW0230;
SD0420NGW0232; SD0425NGW0232; SD0430NGW0232; SD0435NGW0232; SD0720NGW0232;
SD0725NGW0232: SD0730NGW0232; SD0735NGW0232; SD1020NGW0232; SD1025NGW0232;
SD1030NGW0232; SD1035NGW0232; SD1520NGW0232; SD1525NGW0232; SD1530NGW0232;
SD1535NGW0232; SD3020NGW0232; SD3025NGW0232; SD3030NGW0232; SD3035NGW0232;
SD0420NGW0233; SD0425NGW0233; SD0430NGW0233; SD0435NGW0233; SD0720NGW0233;

SD0725NGW0233; SD0730NGW0233; SD0735NGW0233; SD1020NGW0233; SD1025NGW0233;
SD1030NGW0233; SD1035NGW0233; SD1520NGW0233; SD1525NGW0233; SD1530NGW0233;
SD1535NGW0233; SD3020NGW0233; SD3025NGW0233; SD3030NGW0233; SD3035NGW0233;
SD0420NGW0241; SD0425NGW0241; SD0430NGW0241; SD0435NGW0241; SD0720NGW0241;
SD0725NGW0241; SD0730NGW0241; SD0735NGW0241; SD1020NGW0241; SD1025NGW0241;
SD1030NGW0241; SD1035NGW0241; SD1520NGW0241; SD1525NGW0241; SD1530NGW0241;
SD1535NGW0241; SD3020NGW0241; SD3025NGW0241; SD3030NGW0241; SD3035NGW0241;
SD0420NGW0242;SD0425NGW0242; SD0430NGW0242; SD0435NGW0242; SD0720NGW0242;
SD0725NGW0242; SD0730NGW0242; SD0735NGW0242; SD1020NGW0242; SD1025NGW0242;
SD1030NGW0242; SD1035NGW0242; SD1520NGW0242; SD1525NGW0242; SD1530NGW0242;
SD1535NGW0242; SD3020NGW0242; SD3025NGW0242; SD3030NGW0242; SD3035NGW0242;
SD0420NGW0244; SD0425NGW0244; SD0430NGW0244; SD0435NGW0244; SD0720NGW0244;
SD0725NGW0244; SD0730NGW0244; SD0735NGW0244; SD1020NGW0244; SD1025NGW0244;
SD1030NGW0244; SD1035NGW0244; SD1520NGW0244; SD1525NGW0244; SD1530NGW0244:
SD1535NGW0244; SD3020NGW0244; SD3025NGW0244; SD3030NGW0244; SD3035NGW0244;
SD0420NGW0245; SD0425NGW0245; SD0430NGW0245; SD0435NGW0245; SD0720NGW0245;
SD0725NGW0245; SD0730NGW0245; SD0735NGW0245; SD1020NGW0245; SD1025NGW0245;
SD1030NGW0245; SD1035NGW0245; SD1520NGW0245; SD1525NGW0245; SD1530NGW0245;
SD1535NGW0245; SD3020NGW0245; SD3025NGW0245; SD3030NGW0245; SD3035NGW0245:
ST0420NGW0206; ST0425NGW0206; ST0430NGW0206; ST0435NGW0206; ST0720NGW0206;
ST0725NGW0206; ST0730NGW0206; ST0735NGW0206; ST1020NGW0206; ST1025NGW0206;
ST1030NGW0206; ST1035NGW0206; ST1520NGW0206; ST1525NGW0206; ST1530NGW0206;
ST1535NGW0206; ST3020NGW0206; ST3025NGW0206; ST3030NGW0206; ST3035NGW0206;
ST0420NGW0209; ST0425NGW0209; ST0430NGW0209; ST0435NGW0209; ST0720NGW0209;
ST0725NGW0209; ST0730NGW0209; ST0735NGW0209; ST1020NGW0209; ST1025NGW0209;
ST1030NGW0209; ST1035NGW0209; ST1520NGW0209; ST1525NGW0209; ST1530NGW0209;
ST1535NGW0209; ST3020NGW0209; ST3025NGW0209; ST3030NGW0209; ST3035NGW0209:
ST0420NGW0204; ST0425NGW0204; ST0430NGW0204; ST0435NGW0204; ST0720NGW0204;
ST0725NGW0204; ST0730NGW0204; ST0735NGW0204; ST1020NGW0204; ST1025NGW0204;
ST1030NGW0204; ST1035NGW0204; ST1520NGW0204; ST1525NGW0204; ST1530NGW0204;
ST1535NGW0204; ST3020NGW0204; ST3025NGW0204; ST3030NGW0204; ST3035NGW0204:
ST0420NGW0208; ST0425NGW0208; ST0430NGW0208; ST0435NGW0208; ST0720NGW0208;
ST0725NGW0208; ST0730NGW0208; ST0735NGW0208; ST1020NGW0208; ST1025NGW0208;
ST1030NGW0208; ST1035NGW0208; ST1520NGW0208; ST1525NGW0208; ST1530NGW0208;
ST1535NGW0208; ST3020NGW0208; ST3025NGW0208; ST3030NGW0208; ST3035NGW0208;
ST0420NGW0217; ST0425NGW0217; ST0430NGW0217; ST0435NGW0217; ST0720NGW0217;
ST0725NGW0217; ST0730NGW0217; ST0735NGW0217; ST1020NGW0217; ST1025NGW0217;
ST1030NGW0217; ST1035NGW0217; ST1520NGW0217; ST1525NGW0217; ST1530NGW0217;
ST1535NGW0217; ST3020NGW0217; ST3025NGW0217; ST3030NGW0217; ST3035NGW0217;
ST0420NGW0218; ST0425NGW0218; ST0430NGW0218; ST0435NGW0218; ST0720NGW0218;
ST0725NGW0218; ST0730NGW0218; ST0735NGW0218; ST1020NGW0218; ST1025NGW0218;
ST1030NGW0218; ST1035NGW0218; ST1520NGW0218; ST1525NGW0218; ST1530NGW0218;
ST1535NGW0218; ST3020NGW0218; ST3025NGW0218; ST3030NGW0218; ST3035NGW0218;
ST0420NGW0220; ST0425NGW0220; ST0430NGW0220; ST0435NGW0220; ST0720NGW0220;
ST0725NGW0220; ST0730NGW0220; ST0735NGW0220; ST1020NGW0220; ST1025NGW0220;
ST1030NGW0220; ST1035NGW0220; ST1520NGW0220; ST1525NGW0220; ST1530NGW0220;

ST1535NGW0220; ST3020NGW0220; ST3025NGW0220; ST3030NGW0220; ST3035NGW0220;
ST0420NGW0221; ST0425NGW0221; ST0430NGW0221; ST0435NGW0221; ST0720NGW0221;
ST0725NGW0221; ST0730NGW0221; ST0735NGW0221; ST1020NGW0221; ST1025NGW0221;
ST1030NGW0221; ST1035NGW0221; ST1520NGW0221; ST1525NGW0221; ST1530NGW0221;
ST1535NGW0221; ST3020NGW0221; ST3025NGW0221; ST3030NGW0221; ST3035NGW0221;
ST0420NGW0228; ST0425NGW0228; ST0430NGW0228; ST0435NGW0228; ST0720NGW0228;
ST0725NGW0228; ST0730NGW0228; ST0735NGW0228; ST1020NGW0228; ST1025NGW0228;
ST1030NGW0228; ST1035NGW0228; ST1520NGW0228; ST1525NGW0228; ST1530NGW0228;
ST1535NGW0228; ST3020NGW0228; ST3025NGW0228; ST3030NGW0228; ST3035NGW0228;
ST0420NGW0230; ST0425NGW0230; ST0430NGW0230; ST0435NGW0230; ST0720NGW0230;
ST0725NGW0230; ST0730NGW0230; ST0735NGW0230; ST1020NGW0230; ST1025NGW0230;
ST1030NGW0230; ST1035NGW0230; ST1520NGW0230; ST1525NGW0230; ST1530NGW0230;
ST1535NGW0230; ST3020NGW0230; ST3025NGW0230; ST3030NGW0230; ST3035NGW0230;
ST0420NGW0232; ST0425NGW0232; ST0430NGW0232; ST0435NGW0232; ST0720NGW0232;
ST0725NGW0232; ST0730NGW0232; ST0735NGW0232; ST1020NGW0232; ST1025NGW0232;
ST1030NGW0232; ST1035NGW0232; ST1520NGW0232; ST1525NGW0232; ST1530NGW0232;
ST1535NGW0232; ST3020NGW0232; ST3025NGW0232; ST3030NGW0232; ST3035NGW0232;
ST0420NGW0233; ST0425NGW0233; ST0430NGW0233; ST0435NGW0233; ST0720NGW0233;
ST0725NGW0233; ST0730NGW0233; ST0735NGW0233; ST1020NGW0233; ST1025NGW0233;
ST1030NGW0233; ST1035NGW0233; ST1520NGW0233; ST1525NGW0233; ST1530NGW0233;
ST1535NGW0233; ST3020NGW0233; ST3025NGW0233; ST3030NGW0233; ST3035NGW0233;
ST0420NGW0241;ST0425NGW0241; ST0430NGW0241; ST0435NGW0241; ST0720NGW0241;
ST0725NGW0241; ST0730NGW0241; ST0735NGW0241; ST1020NGW0241; ST1025NGW0241;
ST1030NGW0241; ST1035NGW0241; ST1520NGW0241; ST1525NGW0241; ST1530NGW0241;
ST1535NGW0241; ST3620NGW0241; ST3025NGW0241; ST3030NGW0241; ST3035NGW0241;
ST0420NGW0242; ST0420NGW0242; ST0430NGW0242; ST0435NGW0242; ST0720NGW0242;
ST0725NGW0242; ST0730NGW0242; ST0735NGW0242; ST1020NGW0242; ST1025NGW0242;
ST1030NGW0242; ST1035NGW0242; ST1520NGW0242; ST1525NGW0242; ST1530NGW0242;
ST1535NGW0242; ST3020NGW0242; ST3025NGW0242; ST3030NGW0242; ST3035NGW0242;
ST0420NGW0244; ST0425NGW0244; ST0430NGW0244; ST0435NGW0244; ST0720NGW0244;
ST0725NGW0244; ST0730NGW0244; ST0735NGW0244; ST1020NGW0244; ST1025NGW0244;
ST1030NGW0244; ST1035NGW0244; ST1520NGW0244; ST1525NGW0244; ST1530NGW0244;
ST1535NGW0244; ST3020NGW0244; ST3025NGW0244; ST3030NGW0244; ST3035NGW0244;
ST0420NGW0245; ST0425NGW0245; ST0430NGW0245; ST0435NGW0245; ST0720NGW0245;
ST0725NGW0245; ST0730NGW0245; ST0735NGW0245; ST1020NGW0245; ST1025NGW0245;
ST1030NGW0245; ST1035NGW0245; ST1520NGW0245; ST1525NGW0245; ST1530NGW0245;
ST1535NGW0245; ST3020NGW0245; ST3025NGW0245; ST3030NGW0245; ST3035NGW0245; RSD0420N;
RSD0425N; RSD0430N; RSD0435N; RSD0720N; RSD0725N; RSD0730N; RSD0735N; RSD1020N;
RSD1025N; RSD1030N; RSD1035N; RSD1520N; RSD1525N; RSD1530N; RSD1535N; RSD3020N;
RSD3025N; RSD3030N; RSD3035N; RPD0420N; RPD0425N; RPD0430N; RPD0435N; RPD0720N;
RPD0725N; RPD0730N; RPD0735N; RPD1020N; RPD1025N; RPD1030N; RPD1035N; RPD1520N;
RPD1525N; RPD1530N; RPD1535N; RPD3020N; RPD3025N; RPD3030N; RPD3035N; RST0420N;
RST0425N; RST0430N; RST0435N; RST0720N; RST0725N; RST0730N; RST0735N; RST1020N; RST1025N;
RST1030N; RST1035N; RST1520N; RST1525N; RST1530N; RST1535N; RST3020N; RST3025N; RST3030N;
RST3035N; RPT0420N; RPT0425N; RPT0430N; RPT0435N; RPT0720N; RPT0725N; RPT0730N; RPT0735N;
RPT1020N; RPT1025N; RPT1030N; RPT1035N; RPT1520N; RPT1525N; RPT1530N; RPT1535N; RPT3020N;

RPT3025N; RPT3030N; RPT3035N; RSD0420R; RSD0425R; RSD0430R; RSD0435R; RSD0720R; RSD0725R; RSD0730R; RSD0735R; RSD1020R; RSD1025R; RSD1030R; RSD1035R; RSD1520R; RSD1525R; RSD1530R;RSD1535R; RSD3020R; RSD3025R; RSD3030R; RSD3035R; RPD0420R; RPD0425R; RPD0430R; RPD0435R; RPD0720R; RPD0725R; RPD0730R; RPD0735R; RPD1020R; RPD1025R; RPD1030R; RPD1035R; RPD1520R; RPD1525R; RPD1530R; RPD1535R; RPD3020R; RPD3025R; RPD3030R; RPD3035R; RST0420R; RST0425R; RST0430R; RST0435R; RST0720R; RST0725R; RST0730R; RST0735R; RST1020R; RST1025R; RST1030R; RST1035R; RST1520R; RST1525R; RST1530R; RST1535R; RST3020R; RST3025R; RST3030R; RST3035R; RPT0420R; RPT0425R; RPT0430R; RPT0435R; RPT0T20R; RPT0725R; RPT0730R; RPT0735R; RPT1020R; RPT1025R; RPT1030R; RPT1035R; RPT1520R; RPT1525R; RPT1530R; RPT1535R; RPT3020R; RPT3025R; RPT3030R; RPT3035R; ST0420R; ST0425R; ST0430R; ST0435R; ST0720R; ST0725R; ST0730R; ST0735R; ST1020R; ST1025R; ST1030R; ST1035R; ST1520R; ST1525R; ST1530R; ST1535R; ST3020R; ST30258; ST3030R; ST3035R; ST0420RGW0206; ST0425RGW0206; ST0430RGW0206; ST0435RGW0206; ST0720RGW0206; ST0725RGW0206; ST0730RGW0206; ST0735RGW0206; ST1020RGW0206; ST1025RGW0206; ST1030RGW0206; ST1035RGW0206; ST1520RGW0206; ST1525RGW0206; ST1530RGW0206; ST1535RGW0206; ST3020RGW0206; ST3025RGW0206; ST3030RGW0206; ST3035RGW0206; ST0420RGW0209; ST0425RGW0209; ST0430RGW0209; ST0L3SRGW0209; ST0720RGW0209; ST0725RGW0209; ST0730RGW0209; ST0735RGW0209; ST1020RGW0209; ST1025RGW0209; ST1030RGW0209; ST1035RGW0209; ST1520RGW0209; ST1525RGW0209; ST1530RGW0209; ST1535RGW0209; ST3020RGW0209; ST3025RGW0209; ST3030RGW0209; ST3035RGW0209; ST0420RGW0230; ST0425RGW0230; ST0430RGW0230; ST0435RGW0230; ST0720RGW0230; ST0725RGW0230; ST0730RGW0230; ST0735RGW0230; ST1020RGW0230; ST1025RGW0230; ST1030RGW0230; ST1035RGW0230; ST1520RGW0230; ST1525RGW0230; ST1530RGW0230; ST1535RGW0230; ST3020RGW0230; ST3025RGW0230; ST3030RGW0230; ST3035RGW0230; ST0420RGW0233; ST0425RGW0233; ST0430RGW0233; ST0435RGW0233; ST0720RGW0233; ST0725RGW0233; ST0730RGW0233; ST0735RGW0233; ST1020RGW0233; ST1025RGW0233; ST1030RGW0233; ST1035RGW0233; ST1520RGW0233; ST1525RGW0233; ST1530RGW0233; ST1535RGW0233; ST3020RGW0233; ST3025RGW0233; ST3030RGW0233; ST3035RGW0233; ST0420RGW0204; ST0425RGW0204; ST0430RGW0204; ST043SRGW0204; ST0720RGW0204; ST0725RGW0204; ST0730RGW0204; ST0735RGW0204; ST1020RGW0204;ST1025RGW0204; ST1030RGW0204; ST1035RGW0204; ST1520RGW0204; ST1525RGW0204; ST1530RGW0204; ST1535RGW0204; ST3020RGW0204; ST3025RGW0204; ST3030RGW0204; ST3035RGW0204; ST0420RGW0208; ST0425RGW0208; ST0430RGW0208; ST0435RGW0208; ST0720RGW0208; ST0725RGW0208; ST0730RGW0208; ST0735RGW0208; ST1020RGW0208; ST1025RGW0208; ST1030RGW0208; ST1035RGW0208; ST1520RGW0208; ST1525RGW0208; ST1530RGW0208; ST1535RGW0208; ST3020RGW0208; ST3025RGW0208; ST3030RGW0208; ST3035RGW0208; ST0420RGW0217; ST0425RGW0217; STG430RGW0217; ST0435RGW0217; ST0720RGW0217; ST0725RGW0217; ST0730RGW0217; ST0735RGW0217; ST1020RGW0217; ST1025RGW0217; ST1030RGW0217; ST1035RGW0217; ST1520RGW0217; ST1525RGW0217; ST1530RGW0217; ST1535RGW0217; ST3020RGW0217; ST3025RGW0217; ST3030RGW0217; ST3035RGW0217; ST0420RGW0218; ST0425RGW0218; ST0430RGW0218; ST0435RGW0218; ST0720RGW0218; ST0725RGW0218; ST0730RGW0218; ST0735RGW0218; ST1020RGW0218; ST1025RGW0218; ST1030RGW0218; ST1035RGW0218; ST1520RGW0218; ST1525RGW0218; ST1530RGW0218; ST1535RGW0218; ST3020RGW0218; ST3025RGW0218; ST3030RGW0218; ST3035RGW0218; ST0420RGW0220; ST0425RGW0220; ST0430RGW0220; ST0435RGW0220; ST0720RGW0220; ST0725RGW0220; ST0730RGW0220; ST0735RGW0220; ST1020RGW0220; ST1025RGW0220; ST1030RGW0220;

ST1035RGW0220; ST1520RGW0220; ST1525RGW0220; ST1530RGW0220; ST1535RGW0220;
ST3020RGW0220; ST3025RGW0220; ST3030RGW0220; ST3035RGW0220; ST0420RGW0221;
ST0425RGW0221; ST0430RGW0221; ST0435RGW0221; ST0720RGW0221; ST0725RGW0221;
ST0730RGW0221; ST0735RGW0221; ST1020RGW0221; ST1025RGW0221; ST1030RGW0221;
ST1035RGW0221; ST1520RGW0221; ST1525RGW0221; ST1530RGW0221; ST1535RGW0221;
ST3020RGW0221; ST3025RGW0221; ST3030RGW0221; ST3035RGW0221; ST0420RGW0228;
ST0425RGW0228; ST0430RGW0228; ST0435RGW0228; ST0720RGW0228; ST0725RGW0228;
ST0730RGW0228; ST0735RGW0228; ST1020RGW0228; ST1025RGW0228; ST1030RGW0228;
ST1035RGW0228; ST1520RGW0228; ST1525RGW0228; ST1530RGW0228; ST1535RGW0228;
ST3020RGW0228; ST3025RGW0228; ST3030RGW0228; ST3035RGW0228; ST0420RGW0232;
ST0425RGW0232; ST0430RGW0232; ST0435RGW0232; ST0720RGW0232; ST0725RGW0232;
ST0730RGW0232; ST0735RGW0232; ST1020RGW0232; ST1025RGW0232; ST1030RGW0232;
ST1035RGW0232; ST1520RGW0232; ST1525RGW0232; ST1530RGW0232; ST1535RGW0232;
ST3020RGW0232; ST3025RGW0232; ST3030RGW0232;ST3035RGW0232; ST0420RGW0241;
ST0425RGW0241; ST0430RGW0241; ST0435RGW0241; ST0720RGW0241; ST0725RGW0241;
ST0730RGW0241; ST0735RGW0241; ST1020RGW0241; ST1025RGW0241; ST1030RGW0241;
ST1035RGW0241; ST1520RGW0241; ST1525RGW0241; ST1530RGW0241; ST1535RGW0241;
ST3020RGW0241; ST3025RGW0241; ST3030RGW0241; ST3035RGW0241; ST0420RGW0242;
ST0425RGW0242; ST0430RGW0242; ST0435RGW0242; ST0720RGW0242; ST0725RGW0242;
ST0730RGW0242; ST0735RGW0242; ST1020RGW0242; ST1025RGW0242; ST1080RGW0242;
ST1035RGW0242; ST1520RGW0242; ST1525RGW0242; ST1530RGW0242; ST1535RGW0242;
ST3020RGW0242; ST3025RGW0242; ST3030RGW0242; ST3035RGW0242; ST0420RGW0244;
ST0425RGW0244; ST0430RGW0244; ST0435RGW0244; ST0T20RGW0244; ST0725RGW0244;
ST0730RGW0244; ST0735RGW0244; ST1020RGW0244; ST1025RGW0244; ST1030RGW0244;
ST1035RGW0244; ST1520RGW0244; ST1525RGW0244; ST1530RGW0244; ST1535RGW0244;
ST3020RGW0244; ST3025RGW0244; ST3030RGW0244; ST3035RGW0244; ST0420RGW0245;
ST0425RGW0245; ST0430RGW0245; ST0435RGW0245; ST0720RGW0245; ST0725RGW0245;
ST0730RGW0245; ST0735RGW0245; ST1020RGW0245; ST1025RGW0245; ST1030RGW0245;
ST1035RGW0245; ST1520RGW0245; ST1525RGW0245; ST1530RGW0245; ST1535RGW0245;
ST3020RGW0245; ST3025RGW0245; ST3030RGW0245; ST3035RGW0245; RST0720RGW0206;
RST0725RGW0206; RST0730RGW0206; RST0735RGW0206; RST1020RGW0206; RST1025RGW0206;
RST1030RGW0206; RST1035RGW0206; RST1520RGW0206; RST1525RGW0206; RST1530RGW0206;
RST1535RGW0206; RST3020RGW0206; RST3025RGW0206; RST3030RGW0206; RST3035RGW0206;
RST0420RGW0209; RST0425RGW0209; RST0430RGW0209; RST0435RGW0209; RST0720RGW0209;
RST0725RGW0209; RST0730RGW0209; RST0735RGW0209; RST1020RGW0209; RST1025RGW0209;
RST1030RGW0209; RST1035RGW0209; RST1520RGW0209; RST1525RGW0209; RST1530RGW0209;
RST1535RGW0209; RST3020RGW0209; RST3025RGW0209; RST3030RGW0209; RST3035RGW0209;
RST0420RGW0230; RST0425RGW0230; RST0430RGW0230; RST0435RGW0230; RST0720RGW0230;
RST0725RGW0230; RST0730RGW0230; RST0735RGW0230; RST1020RGW0230;
RST1025RGW0230;RST1030RGW0230; RST1035RGW0230; RST1520RGW0230; RST1525RGW0230;
RST1530RGW0230; RST1535RGW0230; RST3020RGW0230; RST3025RGW0230; RST3030RGW0230;
RST3035RGW0230; RST0420RGW0233; RST0425RGW0233; RST0430RGW0233; RST0435RGW0233;
RST0720RGW0233; RST0725RGW0233; RST0730RGW0233; RST0735RGW0233; RST1020RGW0233;
RST1025RGW0233; RST1030RGW0233; RST1035RGW0233; RST1520RGW0233; RST1525RGW0233;
RST1530RGW0233; RST1535RGW0233; RST3020RGW0233; RST3025RGW0233; RST3030RGW0233;
RST3035RGW0233; RST0420RGW0204; RST0425RGW0204; RST0430RGW0204; RST0435RGW0204;

RST0720RGW0204; RST0725RGW0204; RST0730RGW0204; RST0735RGW0204; RST1020RGW0204; RST1025RGW0204; RST1030RGW0204; RST1035RGW0204; RST1520RGW0204; RST1525RGW0204; RST1530RGW0204; RST1535RGW0204; RST3020RGW0204; RST3025RGW0204; RST3030RGW0204; RST3035RGW0204; RST0420RGW0208; RST0425RGW0208; RST0430RGW0208; RST0435RGW0208; RST0720RGW0208; RST0725RGW0208; RST0730RGW0208; RST0735RGW0208; RST1020RGW0208; RST1025RGW0208; RST1030RGW0208; RST1035RGW0208; RST1520RGW0208; RST1525RGW0208; RST1530RGW0208; RST1535RGW0208; RST3020RGW0208; RST3025RGW0208; RST3030RGW0208; RST3035RGW0208; RST0420RGW0217; RST0425RGW0217; RST0430RGW0217; RST0435RGW0217; RST0720RGW0217; RST0725RGW0217; RST0730RGW0217; RST0735RGW0217; RST1020RGW0217; RST1025RGW0217; RST1030RGW0217; RST1035RGW0217; RST1520RGW0217; RST1525RGW0217; RST1530RGW0217; RST1535RGW0217; RST3020RGW0217; RST3025RGW0217; RST3030RGW0217; RST3035RGW0217; RST0420RGW0218; RST0425RGW0218; RST0430RGW0218; RST0435RGW0218; RST0720RGW0218; RST0725RGW0218; RST0730RGW0218; RST0735RGW0218; RST1020RGW0218; RST1025RGW0218;RST1030RGW0218; RST1035RGW0218; RST1520RGW0218; RST1525RGW0218; RST1530RGW0218; RST1535RGW0218; RST3020RGW0218; RST3025RGW0218; RST3030RGW0218; RST3035RGW0218; RST0420RGW0220; RST0425RGW0220; RST0430RGW0220; RST0435RGW0220; RST0720RGW0220; RST0725RGW0220; RST0730RGW0220; RST0735RGW0220; RST1020RGW0220; RST1025RGW0220; RST1030RGW0220; RST1035RGW0220; RST1520RGW0220; RST1525RGW0220; RST1530RGW0220; RST1535RGW0220; RST3020RGW0220; RST3025RGW0220; RST3030RGW0220; RST3035RGW0220; RST0420RGW0221; RST0425RGW0221; RST0430RGW0221; RST0435RGW0221; RST0720RGW0221; RST0725RGW0221; RST0730RGW0221; RST0735RGW0221; RST1020RGW0221; RST1025RGW0221; RST1030RGW0221; RST1035RGW0221; RST1520RGW0221; RST1525RGW0221; RST1530RGW0221; RST1535RGW0221; RST3020RGW0221; RST3025RGW0221; RST3030RGW0221; RST3035RGW0221; RST0420RGW0228; RST0425RGW0228; RST0430RGW0228; RST0435RGW0228; RST0720RGW0228; RST0725RGW0228; RST0730RGW0228; RST0735RGW0228; RST1020RGW0228; RST1025RGW0228; RST1030RGW0228; RST1035RGW0228; RST1520RGW0228; RST1525RGW0228; RST1530RGW0228; RST1535RGW0228; RST3020RGW0228; RST3025RGW0228; RST3030RGW0228; RST3035RGW0228; RST0420RGW0232; RST0425RGW0232; RST0430RGW0232; RST0435RGW0232; RST0720RGW0232; RST0725RGW0232; RST0730RGW0232; RST0735RGW0232; RST1020RGW0232; RST1025RGW0232; RST1030RGW0232; RST1035RGW0232; RST1520RGW0232; RST1525RGW0232; RST1530RGW0232; RST1535RGW0232; RST3020RGW0232; RST3025RGW0232; RST3030RGW0232; RST3035RGW0232; RST0420RGW0241; RST0425RGW0241; RST0430RGW0241; RST0435RGW0241; RST0720RGW0241; RST0725RGW0241; RST0730RGW0241; RST0735RGW0241; RST1020RGW0241; RST1025RGW0241;RST1030RGW0241; RST1035RGW0241; RST1520RGW0241; RST1525RGW0241; RST1530RGW0241; RST1535RGW0241; RST3020RGW0241; RST3025RGW0241; RST3030RGW0241; RST3035RGW0241; RST0420RGW0242; RST0425RGW0242; RST0430RGW0242; RST0435RGW0242; RST0720RGW0242; RST0725RGW0242; RST0730RGW0242; RST0735RGW0242; RST1020RGW0242; RST1025RGW0242; RST1030RGW0242; RST1035RGW0242; RST1520RGW0242; RST1525RGW0242; RST1530RGW0242; RST1535RGW0242; RST3020RGW0242; RST3025RGW0242; RST3030RGW0242; RST3035RGW0242; RST0420RGW0244; RST0425RGW0244; RST0430RGW0244; RST0435RGW0244; RST0720RGW0244; RST0725RGW0244; RST0730RGW0244; RST0735RGW0244; RST1020RGW0244; RST1025RGW0244; RST1030RGW0244; RST1035RGW0244; RST1520RGW0244; RST1525RGW0244; RST1530RGW0244; RST1535RGW0244; RST3020RGW0244; RST3025RGW0244; RST3030RGW0244; RST3035RGW0244; RST0420RGW0245; RST0425RGW0245; RST0430RGW0245; RST0435RGW0245; RST0720RGW0245; RST0725RGW0245; RST0730RGW0245; RST0735RGW0245; RST1020RGW0245; RST1025RGW0245; RST1030RGW0245; RST1035RGW0245; RST1520RGW0245; RST1525RGW0245;

RST1530RGW0245; RST1535RGW0245; RST3020RGW0245; RST3025RGW0245; RST3030RGW0245; RST3035RGW0245; RSD0420NGW0206; RSD0425NGW0206; RSD0430NGW0206; RSD0435NGW0206; RSD0720NGW0206; RSD0725NGW0206; RSD0730NGW0206; RSD0735NGW0206; RSD1020NGW0206; RSD1025NGW0206; RSD1030NGW0206; RSD1035NGW0206; RSD1520NGW0206; RSD1525NGW0206; RSD1530NGW0206; RSD1535NGW0206; RSD3020NGW0206; RSD3025NGW0206; RSD3030NGW0206; RSD3035NGW0206; RSD0420NGW0209; RSD0425NGW0209; RSD0430NGW0209; RSD0435NGW0209; RSD0720NGW0209; RSD0725NGW0209; RSD0730NGW0209; RSD0735NGW0209; RSD1020NGW0209; RSD1025NGW0209;RSD1030NGW0209; RSD1035NGW0209; RSD1520NGW0209; RSD1525NGW0209; RSD1530NGW0209; RSDTS35NGW0209; RSD3020NGW0209; RSD3025NGW0209; RSD3030NGW0209; RSD3035NGW0209; RSD0420NGW0230; RSD0425NGW0230; RSD0430NGW0230; RSD0435NGW0230; RSD0720NGW0230; RSD0725NGW0230; RSD0730NGW0230; RSD0735NGW0230; RSD1020NGW0230; RSD1025NGW0230; RSD1030NGW0230; RSD1035NGW0230; RSD1520NGW0230; RSD1525NGW0230; RSD1530NGW0230; RSD1535NGW0230; RSD3020NGW0230; RSD3025NGW0230; RSD3030NGW0233; RSD3035NGW0230; RSD0420NGW0233; RSD0425NGW0233; RSD0430NGW0233; RSD0435NGW0233; RSD0720NGW0233; RSD0725NGW0233; RSD0730NGW0233; RSD0735NGW0233; RSD1020NGW0233; RSD1025NGW0233; RSD1030NGW0233; RSD1035NGW0233; RSD1520NGW0233; RSD1525NGW0233; RSD1530NGW0233; RSD1535NGW0233; RSD3020NGW0233; RSD3025NGW0233; RSD3030NGW0233; RSD3035NGW0233; RSD0420NGW0204; RSD0425NGW0204; RSD0430NGW0204; RSD0435NGW0204; RSD0720NGW0204; RSD0725NGW0204; RSD0730NGW0204; RSD0735NGW0204; RSD1020NGW0204; RSD1025NGW0204; RSD1030NGW0204; RSD1035NGW0204; RSD1520NGW0204; RSD1525NGW0204; RSD1530NGW0204; RSD1535NGW0204; RSD3020NGW0204; RSD3025NGW0204; RSD3030NGW0204; RSD3035NGW0204; RSD0420NGW0208; RSD0425NGW0208; RSD0430NGW0208; RSD0435NGW0208; RSD0720NGW0208; RSD0725NGW0208; RSD0730NGW0208; RSD0735NGW0208; RSD1020NGW0208; RSD1025NGW0208; RSD1030NGW0208; RSD1035NGW0208; RSD1520NGW0208; RSD1525NGW0208; RSD1530NGW0208; RSD1535NGW0208; RSD3020NGW0208; RSD3025NGW0208; RSD3030NGW0208; RSD3035NGW0208; RSD0420NGW0217; RSD0425NGW0217; RSD0430NGW0217; RSD0435NGW0217; RSD0720NGW0217; RSD0725NGW0217; RSD0730NGW0217; RSD0735NGW0217; RSD1020NGW0217; RSD1025NGW0217;RSD1030NGW0217; RSD1035NGW0217; RSD1520NGW0217; RSD1525NGW0217; RSD1530NGW0217; RSD1535NGW0217; RSD3020NGW0217; RSD3025NGW0217; RSD3030NGW0217; RSD3035NGW0217; RSD0420NGW0218; RSD0425NGW0218; RSD0430NGW0218; RSD0435NGW0218; RSD0720NGW0218; RSD0725NGW0218; RSD0730NGW0218; RSD0735NGW0218; RSD1020NGW0218; RSD1025NGW0218; RSD1030NGW0218; RSD1035NGW0218; RSD1520NGW0218; RSD1525NGW0218; RSD1530NGW0218; RSD1535NGW0218; RSD3020NGW0218; RSD3025NGW0218; RSD3030NGW0218; RSD3035NGW0218; RSD0420NGW0220; RSD0425NGW0220; RSD0430NGW0220; RSD0435NGW0220; RSD0720NGW0220; RSD0725NGW0220; RSD0730NGW0220; RSD0735NGW0220; RSD1020NGW0220; RSD1025NGW0220; RSD1030NGW0220; RSD1035NGW0220; RSD1520NGW0220; RSD1525NGW0220; RSD1530NGW0220; RSD1535NGW0220; RSD3020NGW0220; RSD3025NGW0220; RSD3030NGW0220; RSD3035NGW0220; RSD0420NGW0221; RSD0425NGW0221; RSD0430NGW0221; RSD0435NGW0221; RSD0720NGW0221; RSD0725NGW0221; RSD0730NGW0221; RSD0735NGW0221; RSD1020NGW0221; RSD1025NGW0221; RSD1030NGW0221; RSD1035NGW0221; RSD1520NGW0221; RSD1525NGW0221; RSD1530NGW0221; RSD1535NGW0221; RSD3020NGW0221; RSD3025NGW0221; RSD3030NGW0221; RSD3035NGW0221; RSD0420NGW0228; RSD0425NGW0228; RSD0430NGW0228; RSD0435NGW0228; RSD0720NGW0228; RSD0725NGW0228; RSD0730NGW0228; RSD0735NGW0228; RSD1020NGW0228; RSD1025NGW0228; RSD1030NGW0228; RSD1035NGW0228; RSD1520NGW0228; RSD1525NGW0228; RSD1530NGW0228; RSD1535NGW0228; RSD3020NGW0228; RSD3025NGW0228; RSD3030NGW0228; RSD3035NGW0228; RSD0420NGW0232; RSD0425NGW0232; RSD0430NGW0232; RSD0435NGW0232;

RSD0720NGW0232; RSD0725NGW0232; RSD0730NGW0232; RSD0735NGW0232; RSD1020NGW0232; RSD1025NGW0232; RSD1030NGW0232; RSD1035NGW0232; RSD1520NGW0232; RSD1525NGW0232; RSD1530NGW0232; RSD1535NGW0232; RSD3020NGW0232; RSD3025NGW0232; RSD3030NGW0232; RSD3035NGW0232; RSD0420NGW0241; RSD0425NGW0241; RSD0430NGW0241; RSD0435NGW0241; RSD0720NGW0241; RSD0725NGW0241; RSD0730NGW0241; RSD0735NGW0241; RSD1020NGW0241; RSD1025NGW0241; RSD1030NGW0241; RSD1035NGW0241; RSD1520NGW0241; RSD1525NGW0241; RSD1530NGW0241; RSD1535NGW0241; RSD3020NGW0241; RSD3025NGW0241; RSD3030NGW0241; RSD3035NGW0241; RSD0420NGW0242; RSD0425NGW0242; RSD0430NGW0242; RSD0435NGW0242; RSD0720NGW0242; RSD0725NGW0242; RSD0730NGW0242; RSD0735NGW0242; RSD1020NGW0242; RSD1025NGW0242; RSD1030NGW0242; RSD1035NGW0242; RSD1520NGW0242; RSD1525NGW0242; RSD1530NGW0242; RSD1535NGW0242; RSD3020NGW0242; RSD3025NGW0242; RSD3030NGW0242; RSD3035NGW0242; RSD0420NGW0244; RSD0425NGW0244; RSD0430NGW0244; RSD0435NGW0244; RSD0720NGW0244; RSD0725NGW0244; RSD0730NGW0244; RSD0735NGW0244; RSD1020NGW0244; RSD1025NGW0244; RSD1030NGW0244; RSD1035NGW0244; RSD1520NGW0244; RSD1525NGW0244; RSD1530NGW0244; RSD1535NGW0244; RSD3020NGW0244; RSD3025NGW0244; RSD3030NGW0244; RSD3035NGW0244; RSD0420NGW0245; RSD0425NGW0245; RSD0430NGW0245; RSD0435NGW0245; RSD0720NGW0245; RSD0725NGW0245; RSD0730NGW0245; RSD0735NGW0245; RSD1020NGW0245; RSD1025NGW0245; RSD1030NGW0245; RSD1035NGW0245; RSD1520NGW0245; RSD1525NGW0245; RSD1530NGW0245; RSD1535NGW0245; RSD3020NGW0245; RSD3025NGW0245; RSD3030NGW0245; RSD3035NGW0245; RST0420NGW0206; RST0425NGW0206; RST0430NGW0206; RST0435NGW0206; RST0720NGW0206; RST0725NGW0206; RST0730NGW0206; RST0735NGW0206; RST1020NGW0206; RST1025NGW0206;RST1030NGW0206; RST1035NGW0206; RST1520NGW0206; RST1525NGW0206; RST1530NGW0206; RST1535NGW0206; RST3020NGW0206; RST3025NGW0206; RST3030NGW0206; RST3035NGW0206; RST0420NGW0209; RST0425NGW0209; RST0430NGW0209; RST0435NGW0209; RST0720NGW0209; RST0725NGW0209; RST0730NGW0209; RST0735NGW0209; RST1020NGW0209; RST1025NGW0209; RST1030NGW0209; RST1035NGW0209; RST1520NGW0209; RST1525NGW0209; RST1530NGW0209; RST1535NGW0209; RST3020NGW0209; RST3025NGW0209; RST3030NGW0209; RST3035NGW0209; RST0420NGW0230; RST0425NGW0230; RST0430NGW0230; RST0435NGW0230; RST0720NGW0230; RST0725NGW0230; RST0730NGW0230; RST0735NGW0230; RST1020NGW0230; RST1025NGW0230; RST1030NGW0230; RST1035NGW0230; RST1520NGW0230; RST1525NGW0230; RST1530NGW0230; RST1535NGW0230; RST3020NGW0230; RST3025NGW0230; RST3030NGW0230; RST3035NGW0230; RST0420NGW0233; RST0425NGW0233; RST0430NGW0233; RST0435NGW0233; RST0720NGW0233; RST0725NGW0233; RST0730NGW0233; RST0735NGW0233; RST1020NGW0233; RST1025NGW0233; RST1030NGW0233; RST1035NGW0233; RST1520NGW0233; RST1525NGW0233; RST1530NGW0233; RST1535NGW0233; RST3020NGW0233; RST3025NGW0233; RST3030NGW0233; RST3035NGW0233; RST0420NGW0204; RST0425NGW0204; RST0430NGW0204; RST0435NGW0204; RST0720NGW0204; RST0725NGW0204; RST0730NGW0204; RST0735NGW0204; RST1020NGW0204; RST1025NGW0204; RST1030NGW0204; RST1035NGW0204; RST1520NGW0204; RST1525NGW0204; RST1530NGW0204; RST1535NGW0204; RST3020NGW0204; RST3025NGW0204; RST3030NGW0204; RST3035NGW0204; RST0420NGW0208; RST0425NGW0208; RST0430NGW0208; RST0435NGW0208; RST0720NGW0208; RST0725NGW0208; RST0730NGW0208; RST0735NGW0208; RST1020NGW0208; RST1025NGW0208;RST1030NGW0208; RST1035NGW0208; RST1520NGW0208; RST1525NGW0208; RST1530NGW0208; RST1535NGW0208; RST3020NGW0208; RST3025NGW0208; RST3030NGW0208; RST3035NGW0208; RST0420NGW0217; RST0425NGW0217; RST0430NGW0217; RST0435NGW0217; RST0720NGW0217; RST0725NGW0217; RST0730NGW0217; RST0735NGW0217; RST1020NGW0217; RST1025NGW0217; RST1030NGW0217; RST1035NGW0217; RST1520NGW0217; RST1525NGW0217;

RST1530NGW0217; RST1535NGW0217; RST3020NGW0217; RST3025NGW0217; RST3030NGW0217; RST3035NGW0217; RST0420NGW0218; RST0425NGW0218; RST0430NGW0218; RST0435NGW0218; RST0720NGW0218; RST0725NGW0218; RST0730NGW0218; RST0735NGW0218; RST1020NGW0218; RST1025NGW0218; RST1030NGW0218; RST1035NGW0218; RST1520NGW0218; RST1525NGW0218; RST1530NGW0218; RST1535NGW0218; RST3020NGW0218; RST3025NGW0218; RST3030NGW0218; RST3035NGW0218; RST0420NGW0220; RST0425NGW0220; RST0430NGW0220; RST0435NGW0220; RST0720NGW0220; RST0725NGW0220; RST0730NGW0220; RST0735NGW0220; RST1020NGW0220; RST1025NGW0220; RST1030NGW0220; RST1035NGW0220; RST1520NGW0220; RST1525NGW0220; RST1530NGW0220; RST1535NGW0220; RST3020NGW0220; RST3025NGW0220; RST3030NGW0220; RST3035NGW0220; RST0420NGW0221; RST0425NGW0221; RST0430NGW0221; RST0435NGW0221; RST0720NGW0221; RST0725NGW0221; RST0730NGW0221; RST0735NGW0221; RST1020NGW0221; RST1025NGW0221; RST1030NGW0221; RST1035NGW0221; RST1520NGW0221; RST1525NGW0221; RST1530NGW0221; RST1535NGW0221; RST3020NGW0221; RST3025NGW0221; RST3030NGW0221; RST3035NGW0221; RST0420NGW0228; RST0425NGW0228; RST0430NGW0228; RST0435NGW0228; RST0720NGW0228; RST0725NGW0228; RST0730NGW0228; RST0735NGW0228; RST1020NGW0228; RST1025NGW0228;RST1030NGW0228; RST1035NGW0228; RST1520NGW0228; RST1525NGW0228; RST1530NGW0228; RST1535NGW0228; RST3020NGW0228; RST3025NGW0228; RST3030NGW0228; RST3035NGW0228; RST0420NGW0232; RST0425NGW0232; RST0430NGW0232; RST0435NGW0232; RST0720NGW0232; RST0726NGW0232; RST0730NGW0232; RST0735NGW0232; RST1020NGW0232; RST1025NGW0232; RST1030NGW0232; RST1035NGW0232; RST1520NGW0232; RST1525NGW0232; RST1530NGW0232; RST1535NGW0232; RST3020NGW0232; RST3025NGW0232; RST3030NGW0232, RST3035NGW0232; RST0420NGW0241; RST0425NGW0241; RST0430NGW0241; RST0435NGW0241; RST0720NGW0241; RST0725NGW0241; RST0730NGW0241; RST0T3SNGW0241; RST1020NGW0241; RST1025NGW0241; RST1030NGW0241; RST1035NGW0241; RST1520NGW0241; RST1525NGW0241; RST1530NGW0241; RST1535NGW0241; RST3020NGW0241; RST3025NGW0241; RST3030NGW0241; RST3035NGW0241; RST0420NGW0242; RST0425NGW0242; RST0430NGW0242; RST0435NGW0242; RST0720NGW0242; RST0725NGW0242; RST0730NGW0242; RST0735NGW0242; RST1020NGW0242; RST1025NGW0242; RST1030NGW0242; RST1035NGW0242; RST1520NGW0242; RST1525NGW0242; RST1530NGW0242; RST1535NGW0242; RST3020NGW0242; RST3025NGW0242; RST3030NGW0242; RST3035NGW0242; RST0420NGW0244; RST0425NGW0244; RST0430NGW0244; RST0435NGW0244; RST0720NGW0244; RST0725NGW0244; RST0730NGW0244; RST0735NGW0244; RST1020NGW0244; RST1025NGW0244; RST1030NGW0244; RST1035NGW0244; RST1520NGW0244; RST1525NGW0244; RST1530NGWD244; RST1535NGW0244; RST3020NGW0244; RST3025NGW0244; RST3030NGW0244; RST3035NGW0244; RST0420NGW0245; RST0425NGW0245; RST0430NGW0245; RST0435NGW0245; RST0720NGW0245; RST0725NGW0245; RST0730NGW0245; RST0735NGW0245; RST1020NGW0245; RST1025NGW0245;RST1030NGW0245; RST1035NGW0245; RST1520NGW0245; RST1525NGW0245; RST1530NGW0245; RST1535NGW0245; RST3020NGW0245; RST3025NGW0245; RST3030NGW0245; RST3035NGW0245; RPD0420NGW0206; RPD0425NGW0206; RPD0430NGW0206; RPD0435NGW0206; RPD0720NGW0206; RPD0725NGW0206; RPD0730NGW0206; RPD0735NGW0206; RPD1020NGW0206; RPD1025NGW0206; RPD1030NGW0206; RPD1035NGW0206; RPD1520NGW0206; RPD1525NGW0206; RPD1530NGW0206; RPD1535NGW0206; RPD3020NGW0206; RPD3025NGW0206; RPD3030NGW0206; RPD3035NGW0206; RPD0420NGW0209; RPD0425NGW0209; RPD0430NGW0209; RPD0435NGW0209; RPD0720NGW0209; RPD0725NGW0209; RPD0730NGW0209; RPD0735NGW0209; RPD1020NGW0209; RPD1025NGW0209; RPD1030NGW0209; RPD1035NGW0209; RPD1520NGW0209; RPD1525NGW0209; RPD1530NGW0209; RPD1535NGW0209; RPD3020NGW0209; RPD3025NGW0209; RPD3030NGW0209; RPD3035NGW0209; RPD0420NGW0230; RPD0425NGW0230; RPD0430NGW0230; RPD0435NGW0230;

RPD0720NGW0230; RPD0725NGW0230; RPD0730NGW0230; RPD0735NGW0230; RPD1020NGW0230; RPD1025NGW0230; RPD1030NGW0230; RPD1035NGW0230; RPD1520NGW0230; RPD1525NGW0230; RPD1530NGW0230; RPD1535NGW0230; RPD3020NGW0230; RPD3025NGW0230; RPD3030NGW0230; RPD3035NGW0230; RPD0420NGW0233; RPD0425NGW0233; RPD0430NGW0233; RPD0435NGW0233; RPD0720NGW0233; RPD0725NGW0233; RPD0730NGW0233; RPD0735NGW0233; RPD1020NGW0233; RPD1025NGW0233; RPD1030NGW0233; RPD1035NGW0233; RPD1520NGW0233; RPD1525NGW0233; RPD1530NGW0233; RPD1535NGW0233; RPD3020NGW0233; RPD3025NGW0233; RPD3030NGW0233; RPD3035NGW0233; RPD0420NGW0204; RPD0425NGW0204; RPD0430NGW0204; RPD0435NGW0204; RPD0720NGW0204; RPD0725NGW0204; RPD0730NGW0204; RPD0735NGW0204; RPD1020NGW0204; RPD1025NGW0204;RPD1030NGW0204; RPD1035NGW0204; RPD1520NGW0204; RPD1525NGW0204; RPD1530NGW0204; RPD1535NGW0204; RPD3020NGW0204; RPD3025NGW0204; RPD3030NGW0204; RPD3035NGW0204; RPD0420NGW0208; RPD0425NGW0208; RPD0430NGW0208; RPD0435NGW0208; RPD0720NGW0208; RPD0725NGW0208; RPD0730NGW0208; RPD0735NGW0208; RPD1020NGW0208; RPD1025NGW0208; RPD1030NGW0208; RPD1035NGW0208; RPD1520NGW0208; RPD1525NGW0208; RPD1530NGW0208; RPD1535NGW0268; RPD3020NGW0208; RPD3025NGW0208; RPD3030NGW0208; RPD3035NGW0208; RPD0420NGW0217; RPD0425NGW0217; RPD0430NGW0217; RPD0435NGW0217; RPD0720NGW0217; RPD0725NGW0217; RPD0730NGW0217; RPD0735NGW0217; RPD1020NGW0217; RPD1025NGW0217; RPD1030NGW0217; RPD1035NGW0217; RPD1520NGW0217; RPD1525NGW0217; RPD1530NGW0217; RPD1535NGW0217; RPD3020NGW0217; RPD3025NGW0217; RPD3030NGW0217; RPD3035NGW0217; RPD0420NGW0218; RPD0425NGW0218; RPD0430NGW0218; RPD0435NGW0218; RPD0720NGW0218; RPD0725NGW0218; RPD0730NGW0218; RPD0735NGW0218; RPD1020NGW0218; RPD1025NGW0218; RPD1030NGW0218; RPD1035NGW0218; RPD1520NGW0218; RPD1525NGW0218; RPD1530NGW0218; RPD1535NGW0218; RPD3020NGW0218; RPD3025NGW0218; RPD3030NGW0218; RPD3035NGW0218; RPD0420NGW0220; RPD0425NGW0220; RPD0430NGW0220; RPD0435NGW0220; RPD0720NGW0220; RPD0725NGW0220; RPD0730NGW0220; RPD0735NGW0220; RPD1020NGW0220; RPD1025NGW0220; RPD1030NGW0220; RPD1035NGW0220; RPD1520NGW0220; RPD1525NGW0220; RPD1530NGW0220; RPD1535NGW0220; RPD3020NGW0220; RPD3025NGW0220; RPD3030NGW0220; RPD3035NGW0220; RPD0420NGW0221; RPD0425NGW0221; RPD0430NGW0221; RPD0435NGW0221; RPD0720NGW0221; RPD0725NGW0221; RPD0730NGW0221; RPD0735NGW0221; RPD1020NGW0221; RPD1025NGW0221;RPD1030NGW0221; RPD1035NGW0221; RPD1520NGW0221; RPD1525NGW0221; RPD1530NGW0221; RPD1535NGW0221; RPD3020NGW0221; RPD3025NGW0221; RPD3030NGW0221; RPD3035NGW0221; RPD0420NGW0228; RPD0425NGW0228; RPD0430NGW0228; RPD0435NGW0228; RPD0720NGW0228; RPD0725NGW0228; RPD0730NGW0228; RPD0735NGW0228; RPD1020NGW0228; RPD1025NGW0228; RPD1030NGW0228; RPD1035NGW0228; RPD1520NGW0228; RPD1525NGW0228; RPD1530NGW0228; RPD1535NGW0228; RPD3020NGW0228; RPD3025NGW0228; RPD3030NGW0228; RPD3035NGW0228; RPD0420NGW0232; RPD0425NGW0232; RPD0430NGW0232; RPD0435NGW0232; RPD0720NGW0232; RPD0725NGW0232; RPD0730NGW0232; RPD0735NGW0232; RPD1020NGW0232; RPD1025NGW0232; RPD1030NGW0232; RPD1035NGW0232; RPD1520NGW0232; RPD1525NGW0232; RPD1530NGW0232; RPD1535NGW0232; RPD3020NGW0232; RPD3025NGW0232; RPD3030NGW0232; RPD3035NGW0232; RPD0420NGW0241; RPD0425NGW0241; RPD0430NGW0241; RPD0435NGW0241; RPD0720NGW0241; RPD0725NGW0241; RPD0730NGW0241; RPD0735NGW0241; RPD1020NGW0241; RPD1025NGW0241; RPD1030NGW0241; RPD1035NGW0241; RPD1520NGW0241; RPD1525NGW0241; RPD1530NGW0241; RPD1535NGW0241; RPD3020NGW0241; RPD3025NGW0241; RPD3030NGW0241; RPD3035NGW0241; RPD0420NGW0242; RPD0425NGW0242; RPD0430NGW0242; RPD0435NGW0242; RPD0720NGW0242; RPD0725NGW0242; RPD0730NGW0242; RPD0735NGW0242; RPD1020NGW0242; RPD1025NGW0242; RPD1030NGW0242; RPD1035NGW0242; RPD1520NGW0242; RPD1525NGW0242;

RPD1530NGW0242; RPD1535NGW0242; RPD3020NGW0242; RPD3025NGW0242; RPD3030NGW0242; RPD3035NGW0242; RPD0420NGW0244; RPD0425NGW0244; RPD0430NGW0244; RPD0435NGW0244; RPD0720NGW0244; RPD0725NGW0244; RPD0730NGW0244; RPD0735NGW0244; RPD1020NGW0244; RPD1025NGW0244;RPD1030NGW0244; RPD1035NGW0244; RPD1520NGW0244; RPD1525NGW0244; RPD1530NGW0244; RPD1535NGW0244; RPD3020NGW0244; RPD3025NGW0244; RPD3030NGW0244; RPD3035NGW0244; RPD0420NGW0245; RPD0425NGW0245; RPD0430NGWE245; RPD0435NGW0245; RPD0720NGW0245; RPD0725NGW0245; RPD0730NGW0245; RPD0735NGW0245; RPD1020NGW0245; RPD1025NGW0245; RPD1030NGW0245; RPD1035NGW0245; RPD1520NGW0245; RPD1525NGW0245; RPD1530NGW0245; RPD1535NGW0245; RPD3020NGW0245; RPD3025NGW0245; RPD3030NGW0245; RPD3035NGW0245; RPT0420NGW0206; RPT0425NGW0206; RPT0430NGW0206; RPT0435NGW0206; RPT0720NGW0206; RPT0725NGW0206; RPT0730NGW0206; RPT0735NGW0206; RPT1020NGW0206; RPT1025NGW0206; RPT1030NGW0206; RPT1035NGW0206; RPT1520NGW0206; RPT1525NGW0206; RPT1530NGW0206; RPT1535NGW0206; RPT3020NGW0206; RPT3025NGW0206; RPT3030NGW0206; RPT3035NGW0206; RPT0420NGW0209; RPT0425NGW0209; RPT0430NGW0209; RPT0435NGW0209; RPT0720NGW0209; RPT0725NGW0209; RPT0730NGW0209; RPT0735NGW0209; RPT1020NGW0209; RPT1025NGW0209; RPT1030NGW0209; RPT1035NGW0209; RPT1520NGW0209; RPT1525NGW0209; RPT1530NGW0209; RPT1535NGW0209; RPT3020NGW0209; RPT3025NGW0209; RPT3030NGW0209; RPT3035NGW0209; RPT0420NGW0230; RPT0425NGW0230; RPT0430NGW0230; RPT0435NGW0230; RPT0720NGW0230; RPT0725NGW0230; RPT0730NGW0230; RPT0735NGW0230; RPT1020NGW0230; RPT1025NGW0230; RPT1030NGW0230; RPT1035NGW0230; RPT1520NGW0230; RPT1525NGW0230; RPT1530NGW0230; RPT1535NGW0230; RPT3020NGW0230; RPT3025NGW0230; RPT3030NGW0230; RPT3035NGW0230; RPT0420NGW0233; RPT0425NGW0233; RPT0430NGW0233; RPT0435NGW0233; RPT0720NGW0233; RPT0725NGW0233; RPT0730NGW0233; RPT0735NGW0233; RPT1020NGW0233; RPT1025NGW0233;RPT1030NGW0233; RPT1035NGW0233; RPT1520NGW0233; RPT1525NGW0233; RPT1530NGW0233; RPT1535NGW0233; RPT3020NGW0233; RPT3025NGW0233; RPT3030NGW0233; RPT3035NGW0233; RPT0420NGW0204; RPT0425NGW0204; RPT0430NGW0204; RPT0435NGW0204; RPT0720NGW0204; RPT0725NGW0204; RPT0730NGW0204; RPT0735NGW0204; RPT1020NGW0204; RPT1025NGW0204; RPT1030NGW0204; RPT1035NGW0204; RPT1520NGW0204; RPT1525NGW0204; RPT1530NGW0204; RPT1535NGW0204; RPT3020NGW0204; RPT3025NGW0204; RPT3030NGW0204; RPT3035NGW0204; RPT0420NGW0208; RPT0425NGW0208; RPT0430NGW0208; RPT0435NGW0208; RPT0720NGW0208; RPT0725NGW0208; RPT0730NGW0208; RPT0735NGW0208; RPT1020NGW0208; RPT1025NGW0208; RPT1030NGW0208; RPT1035NGW0208; RPT1520NGW0208; RPT1525NGW0208; RPT1530NGW0208; RPT1535NGW0208; RPT3020NGW0208; RPT3025NGW0208; RPT3030NGW0208; RPT3035NGW0208; RPT0420NGW0217; RPT0425NGW0217; RPT0430NGW0217; RPT0435NGW0217; RPT0720NGW0217; RPT0725NGW0217; RPT0730NGW0217; RPT0735NGW0217; RPT1020NGW0217; RPT1025NGW0217; RPT1030NGW0217; RPT1035NGW0217; RPT1520NGW0217; RPT1525NGW0217; RPT1530NGW0217; RPT1535NGW0217; RPT3020NGW0217; RPT3025NGW0217; RPT3030NGW0217; RPT3035NGW0217; RPT0420NGW0218; RPT0425NGW0218; RPT0430NGW0218; RPT0435NGW0218; RPT0720NGW0218; RPT0725NGW0218; RPT0730NGW0218; RPT0735NGW0218; RPT1020NGW0218; RPT1025NGW0218; RPT1030NGW0218; RPT1035NGW0218; RPT1520NGW0218; RPT1525NGW0218; RPT1530NGW0218; RPT1535NGW0218; RPT3020NGW0218; RPT3025NGW0218; RPT3030NGW0218; RPT3035NGW0218; RPT0420NGW0220; RPT0425NGW0220; RPT0430NGW0220; RPT0435NGW0220; RPT0720NGW0220; RPT0725NGW0220; RPT0730NGW0220; RPT0735NGW0220; RPT1020NGW0220; RPT1025NGW0220;RPT1030NGW0220; RPT1035NGW0220; RPT1520NGW0220; RPT1525NGW0220; RPT1530NGW0220; RPT1535NGW0220; RPT3020NGW0220; RPT3025NGW0220; RPT3030NGW0220; RPT3035NGW0220; RPT0420NGW0221; RPT0425NGW0221; RPT0430NGW0221; RPT0435NGW0221;

RPT0720NGW0221; RPT0725NGW0221; RPT0730NGW0221; RPT0735NGW0221; RPT1020NGW0221; RPT1025NGW0221; RPT1030NGW0221; RPT1035NGW0221; RPT1520NGW0221; RPT1525NGW0221; RPT1530NGW0221; RPT1535NGW0221; RPT3020NGW0221; RPT3025NGW0221; RPT3030NGW0221; RPT3035NGW0221; RPT0420NGW0228; RPT0425NGW0228; RPT0430NGW0228; RPT0435NG!N0228; RPT0720NGW0228; RPT0725NGW0228; RPT0730NGW0228; RPT0735NGW0228; RPT1020NGW0228; RPT1025NGW0228; RPT1030NGW0228; RPT1035NGW0228; RPT1520NGW0228; RPT1525NGW0228; RPT1530NGW0228; RPT1535NGW0228; RPT3020NGW0228; RPT3025NGW0228; RPT3030NGW0228; RPT3035NGW0228; RPT0420NGW0232; RPT0425NGW0232; RPT0430NGW0232; RPT0435NGW0232; RPT0720NGW0232; RPT0725NGW0232; RPT0730NGW0232; RPT0735NGW0232; RPT1020NGW0232; RPT1025NGW0232; RPT1030NGW0232; RPT1035NGW0232; RPT1520NGW0232; RPT1525NGW0232; RPT1530NGW0232; RPT1535NGW0232; RPT3020NGW0232; RPT3025NGW0232; RPT3030NGW0232; RPT3035NGW0232; RPT0420NGW0241; RPT0425NGW0241; RPT0430NGW0241; RPT0435NGW0241; RPT0720NGW0241; RPT0725NGW0241; RPT0730NGW0241; RPT0735NGW0241; RPT1020NGW0241; RPT1025NGW0241; RPT1030NGW0241; RPT1035NGW0241; RPT1520NGW0241; RPT1525NGW0241; RPT1530NGW0241; RPT1535NGW0241; RPT3020NGW0241; RPT3025NGW0241; RPT3030NGW0241; RPT3035NGW0241; RPT0420NGW0242; RPT0425NGW0242; RPT0430NGW0242; RPT0435NGW0242; RPT0720NGW0242; RPT0725NGW0242; RPT0730NGW0242; RPT0735NGW0242; RPT1020NGW0242; RPT1025NGW0242;RPT1030NGW0242; RPT1035NGW0242; RPT1520NGW0242; RPT1525NGW0242; RPT1530NGW0242; RPT1535NGW0242; RPT3020NGW0242; RPT3025NGW0242; RPT3030NGW0242; RPT3035NGW0242; RPT0420NGW0244; RPT0425NGW0244; RPT0430NGW0244; RPT0435NGW0244; RPT0720NGW0244; RPT0725NGW0244; RPT0730NGW0244; RPT0735NGW0244; RPT1020NGW0244; RPT1025NGW0244; RPT1030NGW0244; RPT1035NGW0244; RPT1520NGW0244; RPT1525NGW0244; RPT1530NGW0244; RPT1535NGW0244; RPT3020NGW0244; RPT3025NGW0244; RPT3030NGW0244; RPT3035NGW0244; RPT0420NGW0245; RPT0425NGW0245; RPT0430NGW0245; RPT0435NGW0245; RPT0720NGW0245; RPT0725NGW0245; RPT0730NGW0245; RPT0735NGW0245; RPT1020NGW0245; RPT1025NGW0245; RPT1030NGW0245; RPT1035NGW0245; RPT1520NGW0245; RPT1525NGW0245; RPT1530NGW0245; RPT1535NGW0245; RPT3020NGW0245; RPT3025NGW0245; RPT3030NGW0245; RPT3035NGW0245; RSD0420RGW0206; RSD0425RGW0206; RSD0430RGW0206; RSD0435RGW0206; RSD0720RGW0206; RSD0725RGW0206; RSD0730RGW0206; RSD0735RGW0206; RSD1020RGW0206; RSD1025RGW0206; RSD1030RGW0206; RSD1035RGW0206; RSD1520RGW0206; RSD1525RGW0206; RSD1530RGW0206; RSD1535RGW0206; RSD3020RGW0206; RSD3025RGW0206; RSD3030RGW0206; RSD3035RGW0206; RSD0420RGW0209; RSD0425RGW0209; RSD0430RGW0209; RSD0435RGW0209; RSD0720RGW0209; RSD0725RGW0209; RSD0730RGW0209; RSD0735RGW0209; RSD1020RGW0209; RSD1025RGW0209; RSD1030RGW0209; RSD1035RGW0209; RSD1520RGW0209; RSD1525RGW0209; RSD1530RGW0209; RSD1535RGW0209; RSD3020RGW0209; RSD3025RGW0209; RSD3030RGW0209; RSD3035RGW0209; RSD0420RGW0230; RSD0425RGW0230; RSD0430RGW0230; RSD0435RGW0230; RSD0720RGW0230; RSD0725RGW0230; RSD0730RGW0230; RSD0735RGW0230; RSD1020RGW0230; RSD1025RGW0230;RSD1030RGW0230; RSD1035RGW0230; RSD1520RGW0230; RSD1525RGW0230; RSD1530RGW0230; RSD1535RGW0230; RSD3020RGW0230; RSD3025RGW0230; RSD3030RGW0230; RSD3035RGW0230; RSD0420RGW0233; RSD0425RGW0233; RSD0430RGW0233; RSD0435RGW0233; RSD0720RGW0233; RSD0725RGW0233; RSD0730RGW0233; RSD0735RGW0233; RSD1020RGW0233; RSD1025RGW0233; RSD1030RGW0233; RSD1035RGW0233; RSD1520RGW0233; RSD1525RGW0233; RSD1530RGW0233; RSD1535RGW0233; RSD3020RGW0233; RSD3025RGW0233; RSD3030RGW0233; RSD3035RGW0233; RSD0420RGW0204; RSD0425RGW0204; RSD0430RGW0204; RSD0435RGW0204; RSD0720RGW0204; RSD0725RGW0204; RSD0730RGW0204; RSD0735RGW0204; RSD1020RGW0204; RSD1025RGW0204; RSD1030RGW0204; RSD1035RGW0204; RSD1520RGW0204; RSD1525RGW0204;

RSD1530RGW0204; RSD1535RGW0204; RSD3020RGW0204; RSD3025RGW0204; RSD3030RGW0204; RSD3035RGW0204; RSD0420RGW0208; RSD0425RGW0208; RSD0430RGW0208; RSD0435RGW0208; RSD0720RGW0208; RSD0725RGW0208; RSD0730RGW0208; RSD0735RGW0208; RSD1020RGW0208; RSD1025RGW0208; RSD1030RGW0208; RSD1035RGW0208; RSD1520RGW0208; RSD1525RGW0208; RSD1530RGW0208; RSD1535RGW0208; RSD3020RGW0208; RSD3025RGW0208; RSD3030RGW0208; RSD3035RGW0208; RSD0420RGW0217; RSD0425RGW0217; RSD0430RGW0217; RSD0435RGW0217; RSD0720RGW0217; RSD0725RGW0217; RSD0730RGW0217; RSD0735RGW0217; RSD1020RGW0217; RSD1025RGW0217; RSD1030RGW0217; RSD1035RGW0217; RSD1520RGW0217; RSD1525RGW0217; RSD1530RGW0217; RSD1535RGW0217; RSD3020RGW0217; RSD3025RGW0217; RSD3030RGW0217; RSD3035RGW0217; RSD0420RGW0218; RSD0425RGW0218; RSD0430RGW0218; RSD0435RGW0218; RSD0720RGW0218; RSD0725RGW0218; RSD0730RGW0218; RSD0735RGW0218; RSD1020RGW0218; RSD1025RGW0218;RSD1030RGW0218; RSD1035RGW0218; RSD1520RGW0218; RSD1525RGW0218; RSD1530RGW0218; RSD1535RGW0218; RSD3020RGW0218; RSD3025RGW0218; RSD3030RGW0218; RSD3035RGW0218; RSD0420RGW0220; RSD0425RGW0220; RSD0430RGW0220; RSD0435RGW0220; RSD0720RGW0220; RSD0725RGW0220; RSD0730RGW0220; RSD0735RGW0220; RSD1020RGW0220; RSD1025RGW0220; RSD1030RGW0220; RSD1035RGW0220; RSD1520RGW0220; RSD1525RGW0220; RSD1530RGW0220; RSD1535RGW0220; RSD3020RGW0220; RSD3025RGW0220; RSD3030RGW0220; RSD3035RGW0220; RSD0420RGW0221; RSD0425RGW0221; RSD0430RGW0221; RSD0435RGW0221; RSD0720RGW0221; RSD0725RGW0221; RSD0730RGW0221; RSD0735RGW0221; RSD1020RGW0221; RSD1025RGW0221; RSD1030RGW0221; RSD1035RGW0221; RSD1520RGW0221; RSD1525RGW0221; RSD1530RGW0221; RSD1535RGW0221; RSD3020RGW0221; RSD3025RGW0221; RSD3030RGW0221; RSD3035RGW0221; RSD0420RGW0228; RSD0425RGW0228; RSD0430RGW0228; RSD0435RGW0228; RSD0720RGW0228; RSD0725RGW0228; RSD0730RGW0228; RSD0735RGW0228; RSD1020RGW0228; RSD1025RGW0228; RSD1030RGW0228; RSD1035RGW0228; RSD1520RGW0228; RSD1525RGW0228; RSD1530RGW0228; RSD1535RGW0228; RSD3020RGW0228; RSD3025RGW0228; RSD3030RGW0228; RSD3035RGW0228; RSD0420RGW0232; RSD0425RGW0232; RSD0430RGW0232; RSD0435RGW0232; RSD0720RGW0232; RSD0725RGW0232; RSD0730RGW0232; RSD0735RGW0232; RSD1020RGW0232; RSD1025RGW0232; RSD1030RGW0232; RSD1035RGW0232; RSD1520RGW0232; RSD1525RGW0232; RSD1530RGW0232; RSD1535RGW0232; RSD3020RGW0232; RSD3025RGW0232; RSD3030RGW0232; RSD3035RGW0232; RSD0420RGW0241; RSD0425RGW0241; RSD0430RGW0241; RSD0435RGW0241; RSD0720RGW0241; RSD0725RGW0241; RSD0730RGW0241; RSD0735RGW0241; RSD1020RGW0241; RSD1025RGW0241;RSD1030RGW0241; RSD1035RGW0241; RSD1520RGW0241; RSD1525RGW0241; RSD1530RGW0241; RSD1535RGW0241; RSD3020RGW0241; RSD3025RGW0241; RSD3030RGW0241; RSD3035RGW0241; RSD0420RGW0242; RSD0425RGW0242; RSD0430RGW0242; RSD0435RGW0242; RSD0720RGW0242; RSD0725RGW0242; RSD0730RGW0242; RSD0735RGW0242; RSD1020RGW0242; RSD1025RGW0242; RSD1030RGW0242; RSD1035RGW0242; RSD1520RGW0242; RSD1525RGW0242; RSD1530RGW0242; RSD1535RGW0242; RSD3020RGW0242; RSD3025RGW0242; RSD3030RGW0242; RSD3035RGW0242; RSD0420RGW0244; RSD0425RGW0244; RSD0430RGW0244; RSD0435RGW0244; RSD0720RGW0244; RSD0725RGW0244; RSD0730RGW0244; RSD0735RGW0244; RSD1020RGW0244; RSD1025RGW0244; RSD1030RGW0244; RSD1035RGW0244; RSD1520RGW0244; RSD1525RGW0244; RSD1530RGW0244; RSD1535RGW0244; RSD3020RGW0244; RSD3025RGW0244; RSD3030RGW0244; RSD3035RGW0244; RSD0420RGW0245; RSD0425RGW0245; RSD0430RGW0245; RSD0435RGW0245; RSD0720RGW0245; RSD0725RGW0245; RSD0730RGW0245; RSD0735RGW0245; RSD1020RGW0245; RSD1025RGW0245; RSD1030RGW0245; RSD1035RGW0245; RSD1520RGW0245; RSD1525RGW0245; RSD1530RGW0245; RSD1535RGW0245; RSD3020RGW0245; RSD3025RGW0245; RSD3030RGW0245; RSD3035RGW0245; RPD0420RGW0206; RPD0425RGW0206; RPD0430RGW0206; RPD0435RGW0206;

RPD0720RGW0206; RPD0725RGW0206; RPD0730RGW0206; RPD0735RGW0206; RPD1020RGW0206; RPD1025RGW0206; RPD1030RGW0206; RPD1035RGW0206; RPD1520RGW0206; RPD1525RGW0206; RPD1530RGW0206; RPD1535RGW0206; RPD3020RGW0206; RPD3025RGW0206; RPD3030RGW0206; RPD3035RGW0206; RPD0420RGW0209; RPD0425RGW0209; RPD0430RGW0209; RPD0435RGW0209; RPD0720RGW0209; RPD0725RGW0209; RPD0730RGW0209; RPD0735RGW0209; RPD1020RGW0209; RPD1025RGW0209;RPD1030RGW0209; RPD1035RGW0209; RPD1520RGW0209; RPD1525RGW0209; RPD1530RGW0209; RPD1535RGW0209; RPD3020RGW0209; RPD3025RGW0209; RPD3030RGW0209; RPD3035RGW0209; RPD0420RGW0230; RPD0425RGW0230; RPD0430RGW0230; RPD0435RGW0230; RPD0720RGW0230; RPD0725RGW0230; RPD0730RGW0230; RPD0735RGW0230; RPD1020RGW0230; RPD1025RGW0230; RPD1030RGW0230; RPD1035RGW0230; RPD1520RGW0230; RPD1525RGW0230; RPD1530RGW0230; RPD1535RGW0230; RPD3020RGW0230; RPD3025RGW0230; RPD3030RGW0230; RPD3035RGW0230; RPD0420RGW0233; RPD0425RGW0233; RPD0430RGW0233; RPD0435RGW0233; RPD0720RGW0233; RPD0725RGW0233; RPD0730RGW0233; RPD0735RGW0233; RPD1020RGW0233; RPD1025RGW0233; RPD1030RGW0233; RPD1035RGW0233; RPD1520RGW0233; RPD1525RGW0233; RPD1530RGW0233; RPD1535RGW0233; RPD3020RGW0233; RPD3025RGW0233; RPD3030RGW0233; RPD3035RGW0233; RPD0420RGW0204; RPD0425RGW0204; RPD0430RGW0204; RPD0435RGW0204; RPD0720RGW0204; RPD0725RGW0204; RPD0730RGW0204; RPD0735RGW0204; RPD1020RGW0204; RPD1025RGW0204; RPD1030RGW0204; RPD1035RGW0204; RPD1520RGW0204; RPD1525RGW0204; RPD1530RGW0204; RPD1535RGW0204; RPD3020RGW0204; RPD3025RGW0204; RPD3030RGW0204; RPD3035RGW0204; RPD0420RGW0208; RPD0425RGW0208; RPD0430RGW0208; RPD0435RGW0208; RPD0720RGW0208; RPD0725RGW0208; RPD0730RGW0208; RPD0735RGW0208; RPD1020RGW0208; RPD1025RGW0208; RPD1030RGW0208; RPD1035RGW0208; RPD1520RGW0208; RPD1525RGW0208; RPD1530RGW0208; RPD1535RGW0208; RPD3020RGW0208; RPD3025RGW0208; RPD3030RGW0208; RPD3035RGW0208; RPD0420RGW0217; RPD0425RGW0217; RPD0430RGW0217; RPD0435RGW0217; RPD0720RGW0217; RPD0725RGW0217; RPD0730RGW0217; RPD0735RGW0217; RPD1020RGW0217; RPD1025RGW0217;RPD1030RGW0217; RPD1035RGW0217; RPD1520RGW0217; RPD1525RGW0217; RPD1530RGW0217; RPD1535RGW0217; RPD3020RGW0217; RPD3025RGW0217; RPD3030RGW0217; RPD3035RGW0217; RPD0420RGW0218; RPD0425RGW0218; RPD0430RGW0218; RPD0435RGW0218; RPD0720RGW0218; RPD0725RGW0218; RPD0730RGW0218; RPD0735RGW0218; RPD1020RGW0218; RPD1025RGW0218; RPD1030RGW0218; RPD1035RGW0218; RPD1520RGW0218; RPD1525RGW0218; RPD1530RGW0218; RPD1535RGW0218; RPD3020RGW0218; RPD3025RGW0218; RPD3030RGW0218; RPD3035RGW0218; RPD0420RGW0220; RPD0425RGW0220; RPD0430RGW0220; RPD0435RGW0220; RPD0720RGW0220; RPD0725RGW0220; RPD0730RGW0220; RPD0735RGW0220; RPD1020RGW0220; RPD1025RGW0220; RPD1030RGW0220; RPD1035RGW0220; RPD1520RGW0220; RPD1525RGW0220; RPD1530RGW0220; RPD1535RGW0220; RPD3020RGW0220; RPD3025RGW0220; RPD3030RGW0220; RPD3035RGW0220; RPD0420RGW0221; RPD0425RGW0221; RPD0430RGW0221; RPD0435RGW0221; RPD0720RGW0221; RPD0725RGW0221; RPD0730RGW0221; RPD0735RGW0221; RPD1020RGW0221; RPD1025RGW0221; RPD1030RGW0221; RPD1035RGW0221; RPD1520RGW0221; RPD1525RGW0221; RPD1530RGW0221; RPD1535RGW0221; RPD3020RGW0221; RPD3025RGW0221; RPD3030RGW0221; RPD3035RGW0221; RPD0420RGW0228; RPD0425RGW0228; RPD0430RGW0228; RPD0435RGW0228; RPD0720RGW0228; RPD0725RGW0228; RPD0730RGW0228; RPD0735RGW0228; RPD1020RGW0228; RPD1025RGW0228; RPD1030RGW0228; RPD1035RGW0228; RPD1520RGW0228; RPD1525RGW0228; RPD1530RGW0228; RPD1535RGW0228; RPD3020RGW0228; RPD3025RGW0228; RPD3030RGW0228; RPD3035RGW0228; RPD0420RGW0232; RPD0425RGW0232; RPD0430RGW0232; RPD0435RGW0232; RPD0720RGW0232; RPD0725RGW0232; RPD0730RGW0232; RPD0735RGW0232; RPD1020RGW0232; RPD1025RGW0232;RPD1030RGW0232; RPD1035RGW0232; RPD1520RGW0232; RPD1525RGW0232;

RPD1530RGW0232; RPD1535RGW0232; RPD3020RGW0232; RPD3025RGW0232; RPD3030RGW0232; RPD3035RGW0232; RPD0420RGW0241; RPD0425RGW0241; RPD0430RGW0241; RPD0435RGW0241; RPD0720RGW0241; RPD0725RGW0241; RPD0730RGW0241; RPD0735RGW0241; RPD1020RGW0241; RPD1025RGW0241; RPD1030RGW0241; RPD1035RGW0241; RPD1520RGW0241; RPD1525RGW0241; RPD1530RGW0241; RPD1535RGW0241; RPD3020RGW0241; RPD3025RGW0241; RPD3030RGW0241; RPD3035RGW0241; RPD0420RGW0242; RPD0425RGW0242; RPD0430RGW0242; RPD0435RGW0242; RPD0720RGW0242; RPD0725RGW0242; RPD0730RGW0242; RPD0735RGW0242; RPD1020RGW0242; RPD1025RGW0242; RPD1030RGW0242; RPD1035RGW0242; RPD1520RGW0242; RPD1525RGW0242; RPD1530RGW0242; RPD1535RGW0242; RPD3020RGW0242; RPD3025RGW0242; RPD3030RGW0242; RPD3035RGW0242; RPD0420RGW0244; RPD0425RGW0244; RPD0430RGW0244; RPD0435RGW0244; RPD0720RGW0244; RPD0725RGW0244; RPD0730RGW0244; RPD0735RGW0244; RPD1020RGW0244; RPD1025RGW0244; RPD1030RGW0244; RPD1035RGW0244; RPD1520RGW0244; RPD1525RGW0244; RPD1530RGW0244; RPD1535RGW0244; RPD3020RGW0244; RPD3025RGW0244; RPD3030RGW0244; RPD3035RGW0244; RPD0420RGW0245; RPD0425RGW0245; RPD0430RGW0245; RPD0435RGW0245; RPD0720RGW0245; RPD0725RGW0245; RPD0730RGW0245; RPD0735RGW0245; RPD1020RGW0245; RPD1025RGW0245; RPD1030RGW0245; RPD1035RGW0245; RPD1520RGW0245; RPD1525RGW0245; RPD1530RGW0245; RPD1535RGW0245; RPD3020RGW0245; RPD3025RGW0245; RPD3030RGW0245; RPD3035RGW0245; RPT0420RGW0206; RPT0425RGW0206; RPT0430RGW0206; RPT0435RGW0206; RPT0720RGW0206; RPT0725RGW0206; RPT0730RGW0206; RPT0735RGW0206; RPT1020RGW0206; RPT1025RGW0206;RPT1030RGW0206; RPT1035RGW0206; RPT1520RGW0206; RPT1525RGW0206; RPT1530RGW0206; RPT1535RGW0206; RPT3020RGW0206; RPT3025RGW0206; RPT3030RGW0206; RPT3035RGW0206; RPT0420RGW0209; RPT0425RGW0209; RPT0430RGW0209; RPT0435RGW0209; RPT0720RGW0209; RPT0725RGW0209; RPT0730RGW0209; RPT0735RGW0209; RPT1020RGW0209; RPT1025RGW0209; RPT1030RGW0209; RPT1035RGW0209; RPT1520RGW0209; RPT1525RGW0209; RPT1530RGW0209; RPT1535RGW0209; RPT3020RGW0209; RPT3025RGW0209; RPT3030RGW0209; RPT3035RGW0209; RPT0420RGW0230; RPT0425RGW0230; RPT0430RGW0230; RPT0435RGW0230; RPT0720RGW0230; RPT0725RGW0230; RPT0730RGW0230; RPT0735RGW0230; RPT1020RGW0230; RPT1025RGW0230; RPT1030RGW0230; RPT1035RGW0230; RPT1520RGW0230; RPT1525RGW0230; RPT1530RGW0230; RPT1535RGW0230; RPT3020RGW0230; RPT3025RGW0230; RPT3030RGW0230; RPT3035RGW0230; RPT0420RGW0233; RPT0425RGW0233; RPT0430RGW0233; RPT0435RGW0233; RPT0720RGW0233; RPT0725RGW0233; RPT0730RGW0233; RPT0735RGW0233; RPT1020RGW0233; RPT1025RGW0233; RPT1030RGW0233; RPT1035RGW0233; RPT1520RGW0233; RPT1525RGW0233; RPT1530RGW0233; RPT1535RGW0233; RPT3020RGW0233; RPT3025RGW0233; RPT3030RGW0233; RPT3035RGW0233; RPT0420RGW0204; RPT0425RGW0204; RPT0430RGW0204; RPT0435RGW0204; RPT0720RGW0204; RPT0725RGW0204; RPT0730RGW0204; RPT0735RGW0204; RPT1020RGW0204; RPT1025RGW0204; RPT1030RGW0204; RPT1035RGW0204; RPT1520RGW0204; RPT1525RGW0204; RPT1530RGW0204; RPT1535RGW0204; RPT3020RGW0204; RPT3025RGW0204; RPT3030RGW0204; RPT3035RGW0204; RPT0420RGW0208; RPT0425RGW0208; RPT0430RGW0208; RPT0435RGW0208; RPT0720RGW0208; RPT0725RGW0208; RPT0730RGW0208; RPT0735RGW0208; RPT1020RGW0208; RPT1025RGW0208;RPT1030RGW0208; RPT1035RGW0208; RPT1520RGW0208; RPT1525RGW0208; RPT1530RGW0208; RPT1535RGW0208; RPT3020RGW0208; RPT3025RGW0208; RPT3030RGW0208; RPT3035RGW0208; RPT0420RGW0217; RPT0425RGW0217; RPT0430RGW0217; RPT0435RGW0217; RPT0720RGW0217; RPT0725RGW0217; RPT0730RGW0217; RPT0735RGW0217; RPT1020RGW0217; RPT1025RGW0217; RPT1030RGW0217; RPT1035RGW0217; RPT1520RGW0217; RPT1525RGW0217; RPT1530RGW0217; RPT1535RGW0217; RPT3020RGW0217; RPT3025RGW0217; RPT3030RGW0217; RPT3035RGW0217; RPT0420RGW0218; RPT0425RGW0218; RPT0430RGW0218; RPT0435RGW0218;

RPT0720RGW0218; RPT0725RGW0218; RPT0730RGW0218; RPT0735RGW0218; RPT1020RGW0218; RPT1025RGW0218; RPT1030RGW0218; RPT1035RGW0218; RPT1520RGW0218; RPT1525RGW0218; RPT1530RGW0218; RPT1535RGW0218; RPT3020RGW0218; RPT3025RGW0218; RPT3030RGW0218; RPT3035RGW0218; RPT0420RGW0220; RPT0425RGW0220; RPT0430RGW0220; RPT0435RGW0220; RPT0720RGW0220; RPT0725RGW0220; RPT0730RGW0220; RPT0735RGW0220; RPT1020RGW0220; RPT1025RGW0220; RPT1030RGW0220; RPT1035RGW0220; RPT1520RGW0220; RPT1525RGW0220; RPT1530RGW0220; RPT1535RGW0220; RPT3020RGW0220; RPT3025RGW0220; RPT3030RGW0220; RPT3035RGW0220; RPT0420RGW0221; RPT0425RGW0221; RPT0430RGW0221; RPT0435RGW0221; RPT0720RGW0221; RPT0725RGW0221; RPT0730RGW0221; RPT0735RGW0221; RPT1020RGW0221; RPT1025RGW0221; RPT1030RGW0221; RPT1035RGW0221; RPT1520RGW0221; RPT1525RGW0221; RPT1530RGW0221; RPT1535RGW0221; RPT3020RGW0221; RPT3025RGW0221; RPT3030RGW0221; RPT3035RGW0221; RPT0420RGW0228; RPT0425RGW0228; RPT0430RGW0228; RPT0435RGW0228; RPT0720RGW0228; RPT0725RGW0228; RPT0730RGW0228; RPT0735RGW0228; RPT1020RGW0228; RPT1025RGW0228;RPT1030RGW0228; RPT1035RGW0228; RPT1520RGW0228; RPT1525RGW0228; RPT1530RGW0228; RPT1535RGW0228; RPT3020RGW0228; RPT3025RGW0228; RPT3030RGW0228; RPT3035RGW0228; RPT0420RGW0232; RPT0425RGW0232; RPT0430RGW0232; RPT0435RGW0232; RPT0720RGW0232; RPT0725RGW0232; RPT0730RGW0232; RPT0735RGW0232; RPT1020RGW0232; RPT1025RGW0232; RPT1030RGW0232; RPT1035RGW0232; RPT1520RGW0232; RPT1525RGW0232; RPT1530RGW0232; RPT1535RGW0232; RPT3020RGW0232; RPT3025RGW0232; RPT3030RGW0232; RPT3035RGW0232; RPT0420RGW0241; RPT0425RGW0241; RPT0430RGW0241; RPT0435RGW0241; RPT0720RGW0241; RPT0725RGW0241; RPT0730RGW0241; RPT0735RGW0241; RPT1020RGW0241; RPT1025RGW0241; RPT1030RGW0241; RPT1035RGW0241; RPT1520RGW0241; RPT1525RGW0241; RPT1530RGW0241; RPT1535RGW0241; RPT3020RGW0241; RPT3025RGW0241; RPT3030RGW0241; RPT3035RGW0241; RPT0420RGW0242; RPT0425RGW0242; RPT0430RGW0242; RPT0435RGW0242; RPT0720RGW0242; RPT0725RGW0242; RPT0730RGW0242; RPT0735RGW0242; RPT1020RGW0242; RPT1025RGW0242; RPT1030RGW0242; RPT1035RGW0242; RPT1520RGW0242; RPT1525RGW0242; RPT1530RGW0242; RPT1535RGW0242; RPT3020RGW0242; RPT3025RGW0242; RPT3030RGW0242; RPT3035RGW0242; RPT0420RGW0244; RPT0425RGW0244; RPT0430RGW0244; RPT0435RGW0244; RPT0720RGW0244; RPT0725RGW0244; RPT0730RGW0244; RPT0735RGW0244; RPT1020RGW0244; RPT1025RGW0244; RPT1030RGW0244; RPT1035RGW0244; RPT1520RGW0244; RPT1525RGW0244; RPT1530RGW0244; RPT1535RGW0244; RPT3020RGW0244; RPT3025RGW0244; RPT3030RGW0244; RPT3035RGW0244; RPT0420RGW0245; RPT0425RGW0245; RPT0430RGW0245; RPT0435RGW0245; RPT0720RGW0245; RPT0725RGW0245; RPT0730RGW0245; RPT0735RGW0245; RPT1020RGW0245; RPT1025RGW0245;RPT1030RGW0245; RPT1035RGW0245; RPT1520RGW0245; RPT1525RGW0245; RPT1530RGW0245; RPT1535RGW0245; RPT3020RGW0245; RPT3025RGW0245; RPT3030RGW0245; RPT3035RGW0245; SD0420R; SD0425R; SD0430R; SD0435R; SD0720R; SD0725R; SD0730R; SD0735R; SD1020R; SD1025R; SD1030R; SD1035R; SD1520R; SD1525R; SD1530R; SD1535R; SD3020R; SD3025R; SD3030R;SD3035R; SD0420RGW0206; SD0425RGW0206; SD0430RGW0206; SD0435RGW0206; SD0720RGW0206; SD0725RGW0206; SD0730RGW0206; SD0735RGW0206; SD1020RGW0206; SD1025RGW0206; SD1030RGW0206; SD1035RGW0206; SD1520RGW0206; SD1525RGW0206; SD1530RGW0206; SD1535RGW0206; SD3020RGW0206; SD3025RGW0206; SD3030RGW0206; SD3035RGW0206; SD0420RGW0209; SD0425RGW0209; SD0430RGW0209; SD0435RGW0209; SD0720RGW0209; SD0725RGW0209; SD0730RGW0209; SD0735RGW0209; SD1020RGW0209; SD1025RGW0209; SD1030RGW0209; SD1035RGW0209; SD1520RGW0209; SD1525RGW0209; SD1530RGW0209; SD1535RGW0209; SD3020RGW0209; SD3025RGW0209; SD3030RGW0209; SD3035RGW0209; SD0420RGW0204; SD0425RGW0204; SD0430RGW0204; SD0435RGW0204;

SD0720RGW0204; SD0725RGW0204; SD0730RGW0204; SD0735RGW0204; SD1020RGW0204;
SD1025RGW0204; SD1030RGW0204; SD1035RGW0204; SD1520RGW0204; SD1525RGW0204;
SD1530RGW0204; SD1535RGW0204; SD3020RGW0204; SD3025RGW0204; SD3030RGW0204;
SD3035RGW0204; SD0420RGW0208; SD0425RGW0208; SD0430RGW0208; SD0435RGW0208;
SD0720RGW0208; SD0720RGW0208; SD0730RGW0208; SD0735RGW0208; SD1020RGW0208;
SD1025RGW0208; SD1030RGW0208; SD1035RGW0208; SD1520RGW0208; SD1525RGW0208;
SD1530RGW0208; SD1535RGW0208; SD3020RGW0208; SD3025RGW0208; SD3030RGW0208;
SD3035RGW0208; SD0420RGW0217; SD0425RGW0217; SD0430RGW0217; SD0435RGW0217;
SD0720RGW0217; SD0725RGW0217; SD0730RGW0217; SD0735RGW0217; SD1020RGW0217;
SD1025RGW0217; SD1030RGW0217; SD1035RGW0217; SD1520RGW0217; SD1525RGW0217;
SD1530RGW0217; SD1535RGW0217; SD3020RGW0217; SD3025RGW0217; SD3030RGW0217;
SD3035RGW0217; SD0420RGW0218; SD0425RGW0218; SD0430RGW0218; SD0435RGW0218;
SD0720RGW0218; SD0725RGW0218; SD0730RGW0218; SD0735RGW0218; SD1020RGW0218;
SD1025RGW0218; SD1030RGW0218; SD1035RGW0218; SD1520RGW0218; SD1525RGW0218;
SD1530RGW0218; SD1535RGW0218; SD3020RGW0218; SD3025RGW0218; SD3030RGW0218;
SD3035RGW0218; SD0420RGW0220; SD0425RGW0220; SD0430RGW0220;SD0435RGW0220;
SD0720RGW0220; SD0725RGW0220; SD0730RGW0220; SD0735RGW0220; SD1020RGW0220;
SD1025RGW0220; SD1030RGW0220; SD1035RGW0220; SD1520RGW0220; SD1525RGW0220;
SD1530RGW0220; SD1535RGW0220; SD3020RGW0220; SD3025RGW0220; SD3030RGW0220;
SD3035RGW0220; SD0420RGW0221; SD0425RGW0221; SD0430RGW0221; SD0435RGW0221;
SD0720RGW0221; SD0725RGW0221; SD0730RGW0221; SD073SRGW0221; SD1020RGW0221;
SD1025RGW0221; SD1030RGW0221; SD1035RGW0221; SD1520RGW0221; SD1525RGW0221;
SD1530RGW0221; SD1535RGW0221; SD3020RGW0221; SD3025RGW0221; SD3030RGW0221;
SD3035RGW0221; SD0420RGW0228; SD0425RGW0228; SD0430RGW0228; SD0435RGW0228;
SD0720RGW0228; SD0725RGW0228; SD0730RGW0228; SD0735RGW0228; SD1020RGW0228;
SD1025RGW0228; SD1030RGW0228; SD1035RGW0228; SD1520RGW0228; SD1525RGW0228;
SD1530RGW0228; SD1535RGW0228; SD3020RGW0228; SD3025RGW0228; SD3030RGW0228;
SD3035RGW0228; SD0420RGW0230; SD0425RGW0230; SD0430RGW0230; SD0435RGW0230;
SD0720RGW0230; SD0725RGW0230; SD0730RGW0230; SD0735RGW0230; SD1020RGW0230;
SD1025RGW0230; SD1030RGW0230; SD1035RGW0230; SD1520RGW0230; SD1525RGW0230;
SD1530RGW0230; SD1535RGW0230; SD3020RGW0230; SD3025RGW0230; SD3030RGW0230;
SD3035RGW0230; SD0420RGW0232; SD0425RGW0232; SD0430RGW0232; SD0435RGW0232;
SD0720RGW0232; SD0725RGW0232; SD0730RGW0232; SD0735RGW0232; SD1020RGW0232;
SD1025RGW0232; SD1030RGW0232; SD1035RGWE232; SD1520RGW0232; SD1525RGW0232;
SD1530RGW0232; SD1535RGW0232; SD3020RGW0232; SD3025RGW0232; SD3030RGW0232;
SD3035RGW0232; SD0420RGW0233; SD0425RGW0233; SD0430RGW0233; SD0435RGW0233;
SD0720RGW0233; SD0725RGW0233; SD0730RGW0233; SD0735RGW0233; SD1020RGW0233;
SD1025RGW0233; SD1030RGW0233; SD1035RGW0233; SD1520RGW0233; SD1525RGW0233;
SD1530RGW0233; SD1535RGW0233; SD3020RGW0233; SD3025RGW0233; SD3030RGW0233;
SD3035RGW0233; SD0420RGW0241; SD0425RGW0241; SD0430RGW0241; SD0435RGW0241;
SD0720RGW0241; SD0725RGW0241; SD0730RGW0241; SD0735RGW0241; SD1020RGW0241;
SD1025RGW0241; SD1030RGW0241; SD1035RGW0241; SD1520RGW0241; SD1525RGW0241;
SD1530RGW0241; SD1535RGW0241; SD3020RGW0241; SD3025RGW0241; SD3030RGW0241;
SD3035RGW0241; SD0420RGW0242; SD0425RGW0242; SD0430RGW0242; SD0435RGW0242;
SD0720RGW0242; SD0725RGW0242; SD0730RGW0242; SD0735RGW0242; SD1020RGW0242;
SD1025RGW0242; SD1030RGW0242; SD1035RGW0242; SD1520RGW0242; SD1525RGW0242;

SD1530RGW0242; SD1535RGW0242; SD3020RGW0242; SD3025RGW0242; SD3030RGW0242; SD3035RGW0242; SD0420RGW0244; SD0425RGW0244; SD0430RGW0244; SD0435RGW0244; SD0720RGW0244; SD0725RGW0244; SD0730RGW0244; SD0735RGW0244; SD1020RGW0244; SD1025RGW0244; SD1030RGW0244; SD1035RGW0244; SD1520RGW0244; SD1525RGW0244; SD1530RGW0244; SD1535RGW0244; SD3020RGW0244; SD3025RGW0244; SD3030RGW0244;SD3035RGW0244; SD0420RGW0245; SD0425RGW0245; SD0430RGW0245; SD0435RGW0245; SD0720RGW0245; SD0725RGW0245; SD0730RGW0245; SD0735RGW0245; SD1020RGW0245; SD1025RGW0245; SD1030RGW0245; SD1035RGW0245; SD1520RGW0245; SD1525RGW0245; SD1530RGW0245; SD1535RGW0245; SD3020RGW0245; SD3025RGW0245; SD3030RGW0245; SD3035RGW0245; PD0420N; PD0425N; PD0430N; PD0435N; PD00720N; PD0725N; PD0730N; PD0735N; PD1020N; PD1025N; PD1030N; PD1035N; PD1520N; PD1525N; PD1530N; PD1535N;PD3020N; PD3025N; PD3030N; PD3035N; PD0420NGW0206; PD0425NGW0206; PD0430NGW0206; PD0435NGW0206; PD0720NGW0206; PD0725NGW0206; PD0730NGW0206; PD0735NGW0206; PD1020NGW0206; PD1025NGW0206; PD1030NGW0206; PD1035NGW0206; PD1520NGW0206; PD1525NGW0206; PD1530NGW0206; PD1535NGW0206; PD3020NGW0206; PD3025NGW0206; PD3030NGW0206; PD3035NGW0206; PD0420NGW0209; PD0425NGW0209; PD0430NGW0209; PD0435NGW0209; PD0720NGW0209; PD0725NGW0209; PD0730NGW0209; PD0735NGW0209; PD1020NGW0209; PD1025NGW0209; PD1030NGW0209; PD1035NGW0209; PD1520NGW0209; PD1525NGW0209; PD1530NGW0209; PD1535NGW0209; PD3020NGW0209; PD3025NGW0209; PD3030NGW0209; PD3035NGW0209; PD0420NGW0204; PD0425NGW0204; PD0430NGW0204; PD0435NGW0204; PD0720NGW0204; PD0725NGW0204; PD0730NGW0204; PD0735NGW0204; PD1020NGW0204; PD1025NGW0204; PD1030NGW0204; PD1035NGW0204; PD1520NGW0204; PD1525NGW0204; PD1530NGW0204; PD1535NGW0204; PD3020NGW0204; PD3025NGW0204; PD3030NGW0204; PD3035NGW0204; PD0420NGW0208; PD0425NGW0208; PD0430NGW0208; PD0435NGW0208; PD0720NGW0208; PD0720NGW0208; PD0730NGW0208; PD0735NGW0208; PD1020NGW0208; PD1025NGW0208; PD1030NGW0208; PD1035NGW0208; PD1520NGW0208; PD1525NGW0208; PD1530NGW0208; PD1535NGW0208; PD3020NGW0208; PD3025NGW0208; PD3030NGW0208; PD3035NGW0208; PD0420NGW0217; PD0425NGW0217; PD0430NGW0217; PD0435NGW0217; PD0720NGW0217; PD0725NGW0217; PD0730NGW0217; PD0735NGW0217; PD1020NGW0217; PD1025NGW0217;PD1030NGW0217; PD1035NGW0217; PD1520NGW0217; PD1525NGW0217; PD1530NGW0217; PD1535NGW0217; PD3020NGW0217; PD3025NGW0217; PD3030NGW0217; PD3035NGW0217; PD0420NGW0218; PD0425NGW0218; PD0430NGW0218; PD0435NGW0218; PD0720NGW0218; PD0725NGW0218; PD0730NGW0218; PD0735NGW0218; PD1020NGW0218; PD1025NGW0218; PD1030NGW0218; PD1035NGW0218; PD1520NGW0218; PD1525NGW0218; PD1530NGW0218; PD1535NGW0218; PD3020NGW0218; PD3025NGW0218; PD3030NGW0218; PD3035NGW0218; PD0420NGW0220; PD0425NGW0220; PD0430NGW0220; PD0435NGW0220; PD0720NGW0220; PD0725NGW0220; PD0730NGW0220; PD0735NGW0220; PD1020NGW0220; PD1025NGW0220; PD1030NGW0220; PD1035NGW0220; PD1520NGW0220; PD1525NGW0220; PD1530NGW0220; PD1535NGW0220; PD3020NGW0220; PD3025NGW0220; PD3030NGW0220; PD3035NGW0220; PD0420NGW0221; PD0425NGW0221; PD0430NGW0221; PD0435NGW0221; PD0720NGW0221; PD0725NGW0221; PD0730NGW0221; PD0735NGW0221; PD1020NGW0221; PD1025NGW0221; PD1030NGW0221; PD1035NGW0221; PD1520NGW0221; PD1525NGW0221; PD1530NGW0221; PD1535NGW0221; PD3020NGW0221; PD3025NGW0221; PD3030NGW0221; PD3035NGW0221; PD0420NGW0228; PD0425NGW0228; PD0430NGW0228; PD0435NGW0228; PD0720NGW0228; PD0725NGW0228; PD0730NGW0228; PD0735NGW0228; PD1020NGW0228; PD1025NGW0228; PD1030NGW0228; PD1035NGW0228;

PD1520NGW0228; PD1525NGW0228; PD1530NGW0228; PD1535NGW0228; PD3020NGW0228;
PD3025NGW0228; PD3030NGW0228; PD3035NGW0228; PD0420NGW0230; PD0425NGW0230;
PD0430NGW0230; PD0435NGW0230; PD0720NGW0230; PD0725NGW0230; PD0730NGW0230;
PD0735NGW0230; PD1020NGW0230; PD1025NGW0230; PD1030NGW0230; PD1035NGW0230;
PD1520NGW0230; PD1525NGW0230; PD1530NGW0230; PD1535NGW0230; PD3020NGW0230;
PD3025NGW0230; PD3030NGW0230; PD3035NGW0230; PD0420NGW0232; PD0425NGW0232;
PD0430NGW0232; PD043SNGW0232; PD0720NGW0232; PD0725NGW0232; PD0730NGW0232;
PD0735NGW0232; PD1020NGW0232; PD1025NGW0232; PD1030NGW0232; PD1035NGW0232;
PD1520NGW0232; PD1525NGW0232; PD1530NGW0232; PD1535NGW0232; PD3020NGW0232;
PD3025NGW0232; PD3030NGW0232; PD3035NGW0232; PD0420NGW0233; PD0425NGW0233;
PD0430NGW0233; PD0435NGW0233; PD0720NGW0233; PD0725NGW0233; PD0730NGW0233;
PD0735NGW0233; PD1020NGW0233; PD1025NGW0233; PD1030NGW0233; PD1035NGW0233;
PD1520NGW0233; PD1525NGW0233; PD1530NGW0233; PD1535NGW0233; PD3020NGW0233;
PD3025NGW0233; PD3030NGW0233; PD303SNGW0233;PD0420NGW0241; PD0425NGW0241;
PD0430NGW0241; PD0435NGW0241; PD0720NGWE241; PD0725NGW0241; PD0730NGW0241;
PD0735NGW0241; PD1020NGW0241; PD1025NGW0241; PD1030NGW0241; PD1035NGW0241;
PD1520NGW0241; PD1525NGW0241; PD1530NGWE241; PD1535NGW0241; PD3020NGW0241;
PD3025NGW0241; PD3030NGW0241; PD3035NGW0241; PD0420NGW0242; PD0425NGW0242;
PD0430NGW0242; PD043SNGW0242; PD0720NGW0242; PD0725NGW0242; PD0730NGW0242;
PD0735NGW0242; PD1020NGW0242; PD102SNGW0242; PD1030NGW0242; PD1035NGW0242;
PD1520NGW0242; PD1525NGW0242; PD1S30NGW0242; PD1535NGW0242; PD3020NGW0242;
PD3025NGW0242; PD3030NGW0242; PD3035NGW0242; PD0420NGW0244; PD0425NGW0244;
PD0430NGW0244; PD0435NGW0244; PD0720NGW0244; PD0725NGW0244; PD0730NGW0244;
PD0735NGW0244; PD1020NGW0244; PD1025NGW0244; PD1030NGW0244; PD103SNGW0244;
PD1520NGW0244; PD1525NGW0244; PD1530NGW0244; PD1535NGW0244; PD3020NGW0244;
PD3025NGW0244; PD3030NGW0244; PD3035NGW0244; PD0420NGW0245; PD0425NGW0245;
PD0430NGW0245; PD0435NGW0245; PD0720NGW0245; PD0725NGW0245; PD0730NGW0245;
PD0735NGW0245; PD1020NGW0245; PD1025NGW0245; PD1030NGW0245; PD103ENGW0245;
PD1520NGW0245; PD1525NGW0245; PD1530NGW0245; PD1535NGW0245; PD3020NGW0245;
PD3025NGW0245; PD3030NGW0245; PD3035NGW0245; PD0420R; PD0425R; PD0430R; PD0435R;
PD0720R; PD0725R; PD0730R; PD0735R; PD1020R; PD1025R; PD1030R; PD1035R; PD1520R; PD1525R;
PD1530R; PD1535R; PD3020R; PD3025R; PD3030R; P03035R; PD0420RGW0206; PD0425RGW0206;
PD0430RGW0206; PD0435RGW0206; PD0720RGW0206; PD0725RGW0206; PD0730RGW0206;
PD0735RGW0206; PD1020RGW0206; PD1025RGW0206; PD1030RGW0206; PD1035RGW0206;
PD1520RGW0206; PD1525RGW0206; PD1530RGW0206; PD1535RGW0206; PD3020RGW0206;
PD3025RGW0206; PD3030RGW0206; PD3035RGW0206; PD0420RGW0209; PD0425RGW0209;
PD0430RGW0209; PD0435RGW0209; PD0720RGW0209; PD0725RGW0209; PD0730RGW0209;
PD0735RGW0209; PD1020RGW0209; PD1025RGW0209; PD1030RGW0209; PD1035RGW0209;
PD1520RGW0208; PD1525RGW0209; PD1530RGW0209; PD1535RGW0209; PD3020RGW0209;
PD3025RGW0209; PD3030RGW0209; PD3035RGW0209; PD0420RGW0204; PD0425RGW0204;
PD0430RGW0204; PD0435RGW0204; PD0720RGW0204; PD0725RGW0204; PD0730RGW0204;
PD0735RGW0204; PD1020RGW0204; PD1025RGW0204; PD1030RGW0204; PD1035RGW0204;
PD1520RGW0204; PD1525RGW0204; PD1530RGW0204; PD1535RGW0204;
PD3020RGW0204;PD3025RGW0204; PD3030RGW0204; PD3035RGW0204; PD0420RGW0208;
PD0425RGW0208; PD0430RGW0208; PD0435RGW0208; PD0720RGW0208; PD0720RGW0208;
PD0730RGW0208; PD0735RGW0208; PD1020RGW0208; PD1025RGW0208; PD1030RGW0208;

PD1035RGW0208; PD1520RGW0208; PD1525RGW0208; PD1530RGW0208; PD1535RGW0208; PD3020RGW0208; PD3025RGW0208; PD3030RGW0208; PD3035RGW0208; PD0420RGW0217; PD0425RGW0217; PD0430RGW0217; PD0435RGW0217; PD0720RGW0217; PD0725RGW0217; PD0730RGW0217; PD0735RGW0217; PD1020RGW0217; PD1025RGW0217; PD1030RGW0217; PD1035RGW0217; PD1520RGW0217; PD1525RGW0217; PD1530RGW0217; PD1535RGW0217; PD3020RGW0217; PD3025RGW0217; PD3030RGW0217; PD3035RGW0217; PD0420RGW0218; PD0425RGW0218; PD0430RGW0218; PD0435RGW0218; PD0720RGW0218; PD0725RGW0218; PD0730RGW0218; PD0735RGW0218; PD1020RGW0218; PD1025RGW0218; PD1030RGW0218; PD1035RGW0218; PD1520RGW0218; PD1525RGW0218; PD1530RGW0218; PD1535RGW0218; PD3020RGW0218; PD3025RGW0218; PD3030RGW0218; PD3035RGW0218; PD0420RGW0220; PD0425RGW0220; PD0430RGW0220; PD0435RGW0220; PD0720RGW0220; PD0725RGW0220; PD0730RGW0220; PD0735RGW0220; PD1020RGW0220; PD1025RGW0220; PD1030RGW0220; PD1035RGW0220; PD1520RGW0220; PD1525RGW0220; PD1530RGW0220; PD1535RGW0220; PD3020RGW0220; PD3025RGW0220; PD3030RGW0220; PD3035RGW0220; PD0420RGW0221; PD0425RGW0221; PD0430RGW0221; PD0435RGW0221; PD0720RGW0221; PD0725RGW0221; PD0730RGW0221; PD0735RGW0221; PD1020RGW0221; PD1025RGW0221; PD1030RGW0221; PD1035RGW0221; PD1520RGW0221; PD1525RGW0221; PD1530RGW0221; PD1535RGW0221; PD3020RGW0221; PD3025RGW0221; PD3030RGW0221; PD3035RGW0221; PD0420RGW0228; PD0425RGW0228; PD0430RGW0228; PD0435RGW0228; PD0720RGW0228; PD0725RGW0228; PD0730RGW0228; PD0735RGW0228; PD1020RGW0228; PD1025RGW0228; PD1030RGW0228; PD1035RGW0228; PD1520RGW0228; PD1525RGW0228; PD1530RGW0228; PD1535RGW0228; PD3020RGW0228; PD3025RGW0228; PD3030RGW0228; PD3035RGW0228; PD0420RGW0230; PD0425RGW0230; PD0430RGW0230; PD0435RGW0230; PD0720RGW0230; PD0725RGW0230; PD0730RGW0230; PD0735RGW0230; PD1020RGW0230; PD1025RGW0230; PD1030RGW0230; PD1035RGW0230; PD1520RGW0230; PD1525RGW0230; PD1530RGW0230; PD1535RGW0230; PD3020RGW0230; PD3025RGW0230; PD3030RGW0230; PD3035RGW0230; PD0420RGW0232; PD0425RGW0232; PD0430RGW0232; PD0435RGW0232; PD0720RGW0232; PD0725RGW0232; PD0730RGW0232;PD0735RGW0232; PD1020RGW0232; PD1025RGW0232; PD1030RGW0232; PD1035RGW0232; PD1520RGW0232; PD1525RGW0232; PD1530RGW0232; PD1535RGW0232; PD3020RGW0232; PD3025RGW0232; PD3030RGW0232; PD3035RGW0232; PD0420RGW0233; PD0425RGW0233; PD0430RGW0233; PD0435RGW0233; PD0720RGW0233; PD0725RGW0233; PD0730RGW0233; PD0735RGW0233; PD1020RGW0233; PD1025RGW0233; PD1030RGW0233; PD1035RGW0233; PD1520RGW0233; PD1525RGW0233; PD1530RGW0233; PD1535RGW0233; PD3020RGW0233; PD3025RGW0233; PD3030RGW0233; PD3035RGW0233; PD0420RGW0241; PD0425RGW0241; PD0430RGW0241; PD0435RGW0241; PD0720RGW0241; PD0725RGW0241; PD0730RGW0241; PD0735RGW0241; PD1020RGW0241; PD1025RGW0241; PD1030RGW0241; PD1035RGW0241; PD1520RGW0241; PD1525RGW0241; PD1530RGW0241; PD1535RGW0241; PD3020RGW0241; PD3025RGW0241; PD3030RGW0241; PD3035RGW0241; PD0420RGW0242; PD0425RGW0242; PD0430RGW0242; PD0435RGW0242; PD0720RGW0242; PD0725RGW0242; PD0730RGW0242; PD0735RGW0242; PD1020RGW0242; PD1025RGW0242; PD1030RGW0242; PD1035RGW0242; PD1520RGW0242; PD1525RGW0242; PD1530RGW0242; PD1535RGW0242; PD3020RGW0242; PD3025RGW0242; PD3030RGW0242; PD3035RGW0242; PD0420RGW0244; PD0425RGW0244; PD0430RGW0244; PD0435RGW0244; PD0720RGW0244; PD0725RGW0244; PD0730RGW0244; PD0735RGW0244; PD1020RGW0244; PD1025RGW0244; PD1030RGW0244; PD1035RGW0244; PD1520RGW0244; PD1525RGW0244; PD1530RGW0244; PD1535RGW0244; PD3020RGW0244; PD3025RGW0244; PD3030RGW0244; PD3035RGW0244; PD0420RGW0245;

PD0425RGW0245; PD0430RGW0245; PD0435RGW0245; PD0720RGW0245; PD0725RGW0245; PD0730RGW0245; PD0735RGW0245; PD1020RGW0245; PD10?5RGW0245; PD1030RGW0245; PD1035RGW0245; PD1520RGW0245; PD1525RGW0245; PD1530RGW0245; PD1535RGW0245; PD3020RGW0245; PD3025RGW0245; PD3030RGW0245; PD3035RGW0245; PT0420N; PT0425N; PT0430N; PT0435N; PT0720N; PT0725N; PT0730N; PT0735N; PT1020N; PT1025N; PT1030N; PT1035N; PT1520N; PT1525N; PT1530N, PT1535N; PT3020N; PT3025N; PT3030N; PT3035N; PT0420NGW0206; PT0425NGW0206; PT0430NGW0206; PT0435NGW0206; PT0720NGW0206; PT0725NGW0206; PT0730NGW0206; PT0735NGW0206; PT1020NGW0206; PT1025NGW0206; PT1030NGW0206; PT1035NGW0206; PT1520NGW0206; PT1525NGW0206; PT1530NGW0206; PT1535NGW0206; PT3020NGW0206; PT3035NGW0206; PT3030NGW0206; PT3035NGW0206; PT0420NGW0209; PT0425NGW0209; PT0430NGW0209; PT0435NGW0209;PT0720NGW0209; PT0725NGW0209; PT0730NGW0209; PT0735NGW0209; PT1020NGW0209; PT1025NGW0209; PT1030NGW0209; PT1035NGW0209; PT1520NGW0209; PT1525NGW0209; PT1530NGW0209; PT1535NGW0209; PT3020NGW0209; PT3025NGW0209; PT3030NGW0209; PT3035NGW0209; PT0420NGW0204; PT0425NGW0204; PT0430NGW0204; PT0435NGW0204; PT0720NGW0204; PT0725NGW0204; PT0730NGW0204; PT0735NGW0204; PT1020NGW0204; PT1025NGW0204; PT1030NGW0204; PT1035NGW0204; PT1520NGW0204; PT1525NGW0204; PT1530NGW0204; PT1535NGW0204; PT3020NGW0204; PT3025NGW0204; PT3030NGW0204; PT3035NGW0204; PT0420NGW0208; PT0425NGW0208; PT0430NGW0208; PT0435NGW0208; PT0720NGW0208; PT0720NGW0208; PT0730NGW0208; PT0735NGW0208; PT1020NGW0208; PT1025NGW0208; PT1030NGW0208; PT1035NGW0208; PT1520NGW0208; PT1525NGW0208; PT1530NGW0208; PT1535NGW0208; PT3020NGW0208; PT3025NGW0208; PT3030NGW0208; PT3035NGW0208; PT0420NGW0217; PT0425NGW0217; PT0430NGW0217; PT0435NGW0217; PT0720NGW0217; PT0725NGW0217; PT0730NGW0217; PT0735NGW0217; PT1020NGW0217; PT1025NGW0217; PT1030NGW0217; PT1035NGW0217; PT1520NGW0217; PT1525NGW0217; PT1530NGW0217; PT1535NGW0217; PT3020NGW0217; PT3025NGW0217; PT3030NGW0217; PT3035NGW0217; PT0420NGW0218; PT0425NGW0218; PT0430NGW0218; PT0435NGW0218; PT0720NGW0218; PT0725NGW0218; PT0730NGW0218; PT0735NGW0218; PT1020NGW0218; PT1025NGW0218; PT1030NGW0218; PT1035NGW0218; PT1520NGW0218; PT1525NGW0218; PT1530NGW0218; PT1535NGW0218; PT3020NGW0218; PT3025NGW0218; PT3030NGW0218; PT3035NGW0218; PT0420NGW0220; PT0425NGW0220; PT0430NGW0220; PT0435NGW0220; PT0720NGW0220; PT0725NGW0220; PT0730NGW0220; PT0725NGW0220; PT1020NGW0220; PT1025NGW0220; PT1030NGW0220; PT1035NGW0220; PT1520NGW0220; PT1525NGW0220; PT1530NGW0220; PT1535NGW0220; PT3020NGW0220; PT3025NGW0220; PT3030NGW0220; PT3035NGW0220; PT0420NGW0221; PT0425NGW0221; PT0430NGW0221; PT0435NGW0221; PT0720NGW0221; PT0725NGW0221; PT0730NGW0221; PT0735NGW0221; PT1020NGW0221; PT1025NGW0221; PT1030NGW0221; PT1035NGW0221; PT1520NGW0221; PT1525NGW0221; PT1530NGW0221; PT1535NGW0221; PT3020NGW0221; PT3025NGW0221; PT3030NGW0221; PT3035NGW0221; PT0420NGW0228; PT0425NGW0228; PT0430NGW0228; PT0435NGW0228; PT0720NGW0228; PT0725NGW0228; PT0735NGW0228; PT0735NGW0228; PT1020NGW0228; PT1025NGW0228; PT1030NGW0228; PT1035NGW0228; PT1520NGW0228; PT1525NGW0228;PT1530NGW0228; PT1535NGW0228; PT3020NGW0228; PT3025NGW0228; PT3030NGW0228; PT3035NGW0228; PT0420NGW0230; PT0425NGW0230; PT0430NGW0230; PT0435NGW0230; PT0720NGW0230; PT0725NGW0230; PT0730NGW0230; PT0735NGW0230; PT1020NGW0230; PT1025NGW0230; PT1030NGW0230; PT1035NGW0230; PT1520NGW0230; PT1525NGW0230; PT1530NGW0230; PT1535NGW0230; PT3020NGW0230; PT3025NGW0230; PT3030NGW0230; PT3035NGW0230; PT0420NGW0232;

PT0425NGW0232; PT0430NGW0232; PT0435NGW0232; PT0720NGW0232; PT0725NGW0232;
PT0730NGW0232; PT0735NGW0232; PT1020NGW0232; PT1025NGW0232; PT1030NGW0232;
PT1035NGW0232; PT1520NGW0232; PT1525NGW0232; PT1530NGW0232; PT1535NGW0232;
PT3020NGW0232; PT3025NGW0232; PT3030NGW0232; PT3035NGW0232; PT0420NGW0233;
PT0425NGW0233; PT0430NGW0233; PT0435NGW0233; PT0720NGW0233; PT0725NGW0233;
PT0730NGW0233; PT0735NGW0233; PT1020NGW0233; PT1025NGW0233; PT1030NGW0233;
PT1035NGW0233; PT1520NGW0233; PT1525NGW0233; PT1530NGW0233; PT1535NGW0233;
PT3020NGW0233; PT3025NGW0233; PT3030NGW0233; PT3035NGW0233; PT0420NGW0241;
PT0425NGW0241; PT0430NGW0241; PT0435NGW0241; PT0720NGW0241; PT0725NGW0241;
PT0730NGW0241; PT0735NGW0241; PT1020NGW0241; PT1025NGW0241; PT1030NGW0241;
PT1035NGW0241; PT1520NGW0241; PT1525NGW0241; PT1530NGW0241; PT1535NGW0241;
PT3020NGW0241; PT3025NGW0241; PT3030NGW0241; PT3035NGW0241; PT0420NGW0242;
PT0425NGW0242; PT0430NGW0242; PT0435NGW0242; PT0720NGW0242; PT0725NGW0242;
PT0730NGW0242; PT0735NGW0242; PT1020NGW0242; PT1025NGW0242; PT1030NGW0242;
PT1035NGW0242; PT1520NGW0242; PT1525NGW0242; PT1530NGW0242; PT1535NGW0242;
PT3020NGW0242; PT3025NGW0242; PT3030NGW0242; PT3035NGW0242; PT0420NGW0244;
PT0425NGW0244; PT0430NGW0244; PT0435NGW0244; PT0720NGW0244; PT0725NGW0244;
PT0730NGW0244; PT0735NGW0244; PT1020NGW0244; PT1025NGW0244; PT1030NGW0244;
PT1035NGW0244; PT1520NGW0244; PT1525NGW0244; PT1530NGW0244; PT1535NGW0244;
PT3020NGW0244; PT3025NGW0244; PT3030NGW0244; PT3035NGW0244; PT0420NGW0245;
PT0425NGW0245; PT0430NGW0245; PT0435NGW0245; PT0720NGW0245; PT0725NGW0245;
PT0730NGW0245; PT0735NGW0245; PT1020NGW0245; PT1025NGW0245; PT1030NGW0245;
PT1035NGW0245; PT1520NGW0245; PT1525NGW0245; PT1530NGW0245; PT1535NGW0245;
PT3020NGW0245; PT3025NGW0245; PT3030NGW0245; PT3035NGW0245; PT0420R; PT0425R; PT0430R;
PT0435R; PT0720R; PT0725R; PT0730R;PT0735R; PT1020R; PT1025R; PT1030R; PT1035R; PT1520R;
PT1525R; PT1530R; PT1535R; PT3020R; PT3025R; PT3030R; PT3035R; PT0420RGW0206;
PT0425RGW0206; PT0430RGW02086; PT0435RGW0206; PT0720RGW0206; PT0725RGW0206;
PT0730RGW0206; PT0735RGW0206; PT1020RGW0206; PT1025RGW0206; PT1030RGW0206;
PT1035RGW0206; PT1520RGW0206; PT1525RGW0206; PT1530RGW0206; PT1535RGW0206;
PT3020RGW0206; PT3025RGW0206; PT3030RGW0206; PT3035RGW0206; PT0420RGW0209;
PT0425RGW0209; PT0430RGW0209; PT0435RGW0209; PT0720RGW0209; PT0725RGW0209;
PT0730RGW0209; PT0735RGW0209; PT1020RGW0209; PT1025RGW0209; PT1030RGW0209;
PT1035RGW0209; PT1520RGW0209; PT1525RGW0209; PT1530RGW0209; PT1535RGW0209;
PT3020RGW0209: PT3025RGW0209; PT3030RGW0209; PT3035RGW0209; PT0420RGW0204;
PT0425RGW0204; PT0430RGW0204; PT0435RGW0204; PT0720RGW0204; PT0725RGW0204;
PT0730RGW0204; PT0735RGW0204; PT1020RGW0204; PT1025RGW0204; PT1030RGW0204;
PT1035RGW0204; PT1520RGW0204; PT1525RGW0204; PT1530RGW0204; PT1535RGW0204;
PT3020RGW0204; PT3025RGW0204; PT3030RGW0204; PT3035RGW0204; PT0420RGW0208;
PT0425RGW0208; PT0430RGW0208; PT0435RGW0208; PT0720RGW0208; PT0720RGW0208;
PT0730RGW0208; PT0735RGW0208; PT1020RGW0208; PT1025RGW0208; PT1030RGW0208;
PT1035RGW0208; PT1520RGW0208; PT1525RGW0208; PT1530RGW0208; PT1535RGW0208;
PT3020RGW0208; PT3025RGW0208; PT3030RGW0208; PT3035RGW0208; PT0420RGW0217;
PT0425RGW0217; PT0430RGW0217; PT0435RGW0217; PT0720RGW0217; PT0725RGW0217;
PT0730RGW0217; PT0735RGW0217; PT1020RGW0217; PT1025RGW0217; PT1030RGW0217;
PT1035RGW0217; PT1520RGW0217; PT1525RGW0217; PT1530RGW0217; PT1535RGW0217;
PT3020RGW0217; PT3025RGW0217; PT3030RGW0217; PT3035RGW0217; PT0420RGW0218;

PT0425RGW0218; PT0430RGW0218; PT0435RGW0218; PT0720RGW0218; PT0725RGW0218; PT0730RGW0218; PT8735RGW0218; PT1020RGW0218; PT1025RGW0218; PT1030RGW0218; PT1035RGW0218; PT1520RGW0218; PT1525RGW0218; PT1530RGW0218; PT1535RGW0218; PT3020RGW0218; PT3025RGW0218; PT3030RGW0218; PT3035RGW0218; PT0420RGW0220; PT0425RGW0220; PT0430RGW0220; PT0435RGW0220; PT0720RGW0220; PT0725RGW0220; PT0730RGW0220; PT0735RGW0220; PT1020RGW0220; PT1025RGW0220; PT1030RGW0220; PT1035RGW0220; PT1520RGW0220; PT1525RGW0220; PT1530RGW0220; PT1535RGW0220; PT3020RGW0220; PT3025RGW0220; PT3030RGW0220; PT3035RGW0220; PT0420RGW0221; PT0425RGW0221;PT0430RGW0221; PT0435RGW0221; PT0720RGW0221; PT0725RGW0221; PT0730RGW0221; PT0735RGW0221; PT1020RGW0221; PT1025RGW0221; PT1030RGW0221; PT1035RGW0221; PT1520RGW0221; PT1525RGW0221; PT1530RGW0221; PT1535RGW0221; PT3020RGW0221; PT3025RGW0221; PT3030RGW0221; PT3035RGW0221; PT0420RGW0228; PT0425RGW0228; PT0430RGW0228; PT0435RGW0228; PT0720RGW0228; PT0725RGW0228; PT0730RGW0228; PT0735RGW0228; PT1020RGW0228; PT1025RGW0228; PT1030RGW0228; PT1045RGW0228; PT1520RGW0228; PT1525RGW0228; PT1530RGW0228; PT1535RGW0228; PT3020RGW0228; PT3025RGW0228; PT3030RGW0228; PT3035RGW0228; PT0420RGW0230; PT0425RGW0230; PT0430RGW0230; PT0435RGW0230; PT0720RGW0230; PT0725RGW0230; PT0730RGW0230; PT0735RGW0230; PT1020RGW0230; PT1025RGW0230; PT1030RGW0230; PT1035RGW0230; PT1520RGW0230; PT1525RGW0230; PT1530RGW0230; PT1535RGW0230; PT3020RGW0230; PT3025RGW0230; PT3030RGW0230; PT3035RGW0230; PT0420RGW0232; PT0425RGW0232; PT0430RGW0232; PT0435RGW0232; PT0720RGW0232; PT0725RGW0232; PT0730RGW0232; PT0735RGW0232; PT1020RGW0232; PT1025RGW0232; PT1030RGW0232; PT1035RGW0232; PT1520RGW0232; PT1525RGW0232; PT1530RGW0232; PT1535RGW0232; PT3020RGW0232; PT3025RGW0232; PT3030RGW0232; PT3035RGW0232; PT0420RGWE233; PT0425RGWE233; PT0430RGW0233; PT0435RGW0233; PT0720RGW0233; PT0725RGWE233; PT0730RGWE233; PT0735RGW0233; PT1020RGW0233; PT1025RGW0233; PT1030RGW0233; PT1035RGW0233; PT1520RGW0233; PT1525RGW0233; PT1530RGW0233; PT1535RGW0235; PT3020RGW0233; PT3025RGW0233; PT3030RGW0233; PT3035RGW0233; PT0420RGW0241; PT0725RGW0241; PT0430RGW0241; PT0435RGW0241; PT0720RGW0241; PT0725RGW0241; PT0730RGW0241; PT0735RGW0241; PT1020RGW0241; PT1025RGW0241; PT1030RGW0241; PT1035RGW0241; PT1520RGW0241; PT1525RGW0241; PT1530RGW0241; PT1535RGW0241; PT3020RGW0241; PT3025RGW0241; PT3030RGW0241; PT3035RGW0241; PT0420RGW0242; PT0425RGW0242; PT0430RGW0242; PT0435RGW0242; PT0720RGW0242; PT0725RGW0242; PT0730RGW0242; PT0735RGW0242; PT1020RGW0242; PT1025RGW0242; PT1030RGW0242; PT1035RGW0242, PT1520RGW0242; PT1525RGW0242; PT1530RGW0242; PT1535RGW0242; PT3020RGW0242; PT3025RGW0242; PT3030RGW0242; PT3035RGW0242; PT0420RGW0244; PT0425RGW0244; PT0430RGW0244; PT0435RGW0244; PT0720RGW0244; PT0725RGW0244; PT0730RGW0244; PT0735RGW0244; PT1020RGW0244; PT1025RGW0244; PT1030RGW0244; PT1035RGW0244;PT1520RGW0244; PT1525RGW0244; PT1530RGW0244; PT1535RGW0244; PT3020RGW0244; PT3025RGW0244; PT3030RGW0244; PT3035RGW0244; PT0420RGW0245; PT0425RGW0245; PT0430RGW0245; PT0435RGW0245; PT0720RGW0245; PT0725RGW0245; PT0730RGW0245; PT0735RGW0245; PT1020RGW0245; PT1025RGW0245; PT1030RGW0245; PT1035RGW0245; PT1520RGW0245; PT1525RGW0245; PT1530RGW0245; PT1535RGW0245; PT3020RGW0245; PT3025RGW0245; PT3030RGW0245; PT3035RGW0245

Clase de Riesgo: III

Indicación/es autorizada/s:
Este dispositivo se utiliza para la canulación del sistema ductal y para la esfinterotomía.

Período de vida útil: 3 años

Condición de uso: Uso exclusivo a profesionales e instituciones sanitarias

Fuente de obtención de la materia prima de origen biológico: No Aplica

Forma de presentación: Por Unidad

Método de esterilización: Oxido de etileno

Nombre del fabricante:
Leo Medical Co., Ltd.

Lugar de elaboración:
1st and 2nd Floor, No. 10 Building, 18 Huashan Road, 213022 Changzhou City, Jiangsu Province, República Popular China

Expediente N° 1-0047-3110-000229-24-4

N° Identificatorio Trámite: 55838

AM

Digitally signed by PEARSON Enriqueta María
Date: 2024.02.14 17:43:32 ART
Location: Ciudad Autónoma de Buenos Aires

Enriqueta Maria Pearson
Subadministradora Nacional
Administración Nacional de Medicamentos, Alimentos y Tecnología Médica

Digitally signed by GESTION DOCUMENTAL ELECTRONICA - GDE
Date: 2024.02.14 17:43:34 -03:00

Fabricado por:

Leo Medical Co., Ltd.
1st and 2nd Floor, No. 10 Building, 18 Huashan Road,
213022 Changzhou City, Jiangsu Province,
República Popular China

Importado por:

FOC S.R.L.
Caldas 1448
Ciudad Autónoma de Bs.As.
República Argentina

LeoMed 乐奥医疗 让生命更健康

ESFINTEROTOMO

Modelo: (Según corresponda) Código: XXXXX

Contenido: una unidad Lote: XXXX Vencimiento: XX/YY

STERILE EO

PRODUCTO DE UN SOLO USO. No reutilizar. Single Use Only

No reesterilizar. STERILIZE

Leer las instrucciones de uso.

No utilizar si el envase no está intacto.

Conservar en un lugar seco, fresco a temperatura ambiente, limpio y ventilado.

Directora Técnica: Patricia Sandra Cadeiras. Farmacéutica, M.N.: 10.889

FOC S.R.L
GRACIELA M GUERRA
SOCIA GERENTE

PATRICIA S. CADEIRAS
FARMACEUTICA M.N. 10889

"AUTORIZADO POR LA A.N.M.A.T PM 1737-37"

USO EXCLUSIVO A PROFESIONALES E INSTITUCIONES SANITARIAS

Fabricado por:
Leo Medical Co., Ltd.
1st and 2nd Floor, No. 10 Building, 18 Huashan Road,
213022 Changzhou City, Jiangsu Province,
República Popular China

Importado por:
FOC S.R.L.
Caldas 1448
Ciudad Autónoma de Bs.As.
República Argentina

Esfinterótomo

STERILE EO

PRODUCTO DE UN SOLO USO. No reutilizar. Single Use Only

No reesterilizar.

Leer las instrucciones de uso.

No utilizar si el envase no está intacto.

Directora Técnica: Patricia Sandra Cadeiras.
Farmacéutica, M.N.: 10.889

"AUTORIZADO POR LA A.N.M.A.T PM 1737-37"

USO EXCLUSIVO A PROFESIONALES E INSTITUCIONES SANITARIAS

PATRICIA S. CADEIRAS
FARMACEUTICA M.N. 10889

FOC S.R.L
GRACIELA M GUERRA
SOCIA GERENTE

Descripción del producto

El dispositivo está hecho de un tubo flexible de politetrafluoroetileno (PTFE) con un alambre en el extremo distal y un mango en el extremo proximal. Se presenta en dos formatos, formato estándar y formato precortado. Se pueden elegir funciones como rotación y cambio rápido. Algunos de los dispositivos presentan tres lúmenes: lumen para el alambre guía, lumen de inyección y el lumen del alambre de corte. Los demás tienen dos lúmenes, uno es para alambre guía, el otro es para alambre de corte.

Para el esfinterótomo precargado, el alambre guía se ha colocado en el lumen del alambre guía.

Se puede colocar un alambre guía de 0,035 pulgadas (0,89 mm) o menos en el lumen del alambre guía.

En la Figura 1 se muestra el diagrama esquemático de la estructura del producto.

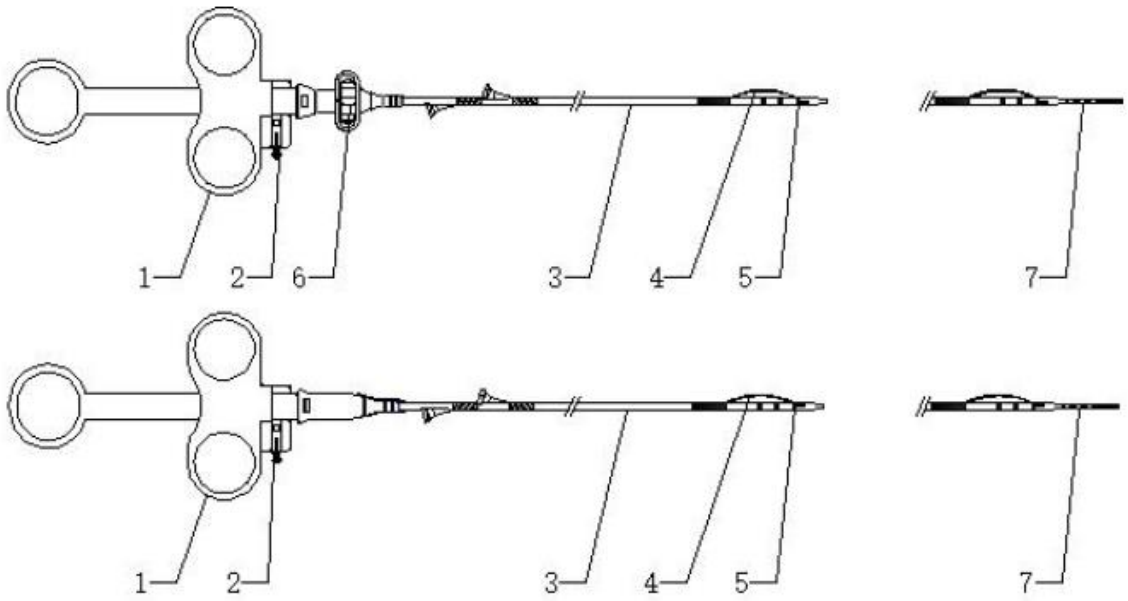

1-mango; 2-plug; 3-vaina; 4-alambre de corte; 5-marcador; 6-ruedas (o no); 7-alambre guía

FOC S.R.L
GRACIELA M GUERRA
SOCIA GERENTE

PATRICIA S. CADEIRAS
FARMACEUTICA M.N. 10889

Especificaciones del producto

Rotable	Formato	Lumens	Cambio rápido	Long de alambre (mm)	Long de tip (mm)	Alambre guía
Si/No	Standard/ Pre-cortado	Doble lumen/ Triple lumen	Si/ No	20.0/25.0/ 30.0/35.0	4/7/10/ 15/30	Si /No

Alambre Guía			
Diam (pulgadas)	Longitud (mm)	Dureza	Forma de la punta
0.035/ 0.025	2600/ 4500	Normal/ Super	Derecho/ Angulo

Indicaciones de uso

Este dispositivo se utiliza para la canulación del sistema ductal y para la esfinterotomía.

Contraindicaciones

Las contraindicaciones incluyen las específicas de la ERCP y cualquier procedimiento que se deba realizar.
Se incluyen, entre otros, coagulopatía e incapacidad para colocar correctamente el alambre del esfinterótomo.

Posibles efectos adversos

Las posibles complicaciones asociadas con la ERCP incluyen, entre otras: pancreatitis, colangitis, aspiración, perforación, hemorragia, infección, sepsis, reacción alérgica al contraste o medicación, hipotensión, depresión o paro respiratorio, insuficiencia cardíaca, arritmia o paro.

PATRICIA S. CADEIRAS
FARMACEUTICA M.N. 10889

FOC S.R.L
GRACIELA M GUERRA
SOCIA GERENTE

Advertencias

1) Consulte la etiqueta del paquete para conocer el tamaño mínimo del canal requerido para este dispositivo.

2) Este dispositivo tiene una longitud de cable de 2,1 m; El voltaje para este dispositivo es de 1,2 kVp.

3) Cualquier accesorio electroquirúrgico constituye un potencial peligro eléctrico para el paciente y el operador. Los posibles efectos adversos incluyen, pero no se limitan a: fulguración, quemaduras, estimulación nerviosa y/o muscular y arritmia cardíaca.

4) Antes de utilizar este dispositivo, siga las recomendaciones proporcionadas por el fabricante de las unidades electroquirúrgicas para garantizar la seguridad del paciente mediante la colocación y utilización adecuadas del electrodo de retorno del paciente.

5) Cambie la unidad electroquirúrgica a la posición "apagado" cuando no esté en uso.

6) Cuando esté encendido, asegúrese de que el esfinterótomo esté completamente fuera del endoscopio. El contacto del esfinterótomo con el endoscopio puede causar conexión a tierra, lo que puede provocar lesiones al paciente y al operador, o dañar el esfinterótomo o endoscopio.

7) No flexione demasiado ni arquee la punta más allá de 90º, ya que esto puede dañar o causar que el alambre se rompa.

8) No inserte el extremo distal del esfinterótomo ni el alambre guía en la papila del esfínter cuando gira la rueda, puede causar rotura o doblado del cable.

9) El grado de rotación máximo distal es de -45° a +45° hacia la dirección inicial, si es más, el cable puede estar torcido o incluso roto.

10) Si hay precarga, el uso de dispositivos de ERCP con guía de alambre con punta metálica puede provocar daños en el revestimiento externo y/o en la punta de la guía de alambre.

11) Colocar el esfinterótomo y los cables de conexión para evitar el contacto con los pacientes u otros cables; debe almacenarse separado del paciente si no se utiliza temporalmente.

12) Se deben verificar los cables de conexión y otros accesorios regularmente, para evitar la posibilidad de daños.

13) No utilizar si la barrera estéril está dañada.

14) Para un solo uso. No reutilizar, reprocesar ni reesterilizar.

15) Después del uso, deseche el producto y el embalaje de acuerdo con la política hospitalaria, administrativa y/o del gobierno local.

PATRICIA S. CADEIRAS
FARMACEUTICA M.N. 10889

FOC S.R.L
GRACIELA M GUERRA
SOCIA GERENTE

Precauciones

El esfinterótomo debe usarse junto con un tipo BF o Generador de CF. Esta parte de aplicación del producto pertenece al tipo BF.

1) Antes de usar, lea la compatibilidad electromagnética proporcionada en este manual. Preste atención a la etiqueta para conocer el tamaño mínimo del canal del endoscopio.

2) No utilice fuerza excesiva para doblar el extremo distal. Esto podría dañar el cable.

3) Cualquier accesorio electroquirúrgico constituye un potencial peligro eléctrico para el paciente y el operador. Los posibles efectos adversos incluyen, pero no se limitan a: fulguración, quemaduras, estimulación nerviosa y/o muscular y arritmia cardíaca.

4) Mantenga el equipo electroquirúrgico cerrado cuando la electrocirugía no esté en uso.

5) Asegúrese de que el voltaje no sea superior al nominal.

6) Los equipos de comunicación por radiofrecuencia portátil y móvil pueden afectar este dispositivo.

7) Este dispositivo no debe estar cerca ni apilado con otros equipos.

Eliminación de productos

Después de su uso, este producto puede ser un riesgo biológico potencial. Manipule y elimine de acuerdo con las normas médicas aceptadas, la práctica y las leyes y reglamentos aplicables.

Conservación

El dispositivo debe almacenarse en un lugar seco, fresco a temperatura ambiente, limpio y ventilado.

Método de esterilización

El dispositivo se esteriliza utilizando el método de esterilización por óxido de etileno.

FOC S.R.L
GRACIELA M GUERRA
SOCIA GERENTE

PATRICIA S. CADEIRAS
FARMACEUTICA M.N. 10889

REF	Número catálogo	LOT	Lote
	Fecha de manufactura		Usar antes de
STERILEO	Esterilizado por óxido de etileno		No reutilizar
	No reesterilizar		No utilizar si el envase está dañado
	Consultar instrucciones de uso		Precaución

	Mantener seco		Proteger del calor y fuentes radiactivas
	Fabricante	EC REP	Representante autorizado en la Comunidad Europea

FOC S.R.L
GRACIELA M GUERRA
SOCIA GERENTE

PATRICIA S. CADEIRAS
FARMACEUTICA M.N. 10889

República Argentina - Poder Ejecutivo Nacional
AÑO DE LA DEFENSA DE LA VIDA, LA LIBERTAD Y LA PROPIEDAD

Hoja Adicional de Firmas
Anexo

Número: IF-2024-12839666-APN-DVPCYAR#ANMAT

CIUDAD DE BUENOS AIRES
Lunes 5 de Febrero de 2024

Referencia: FOC SRL

El documento fue importado por el sistema GEDO con un total de 7 pagina/s.

Digitally signed by GESTION DOCUMENTAL ELECTRONICA - GDE
Date: 2024.02.05 12:23:52 -03:00

Mariela Garcia
Jefe II
Dirección de Vigilancia Post Comercialización y Acciones Reguladoras
Administración Nacional de Medicamentos, Alimentos y Tecnología
Médica

Digitally signed by GESTION DOCUMENTAL ELECTRONICA - GDE
Date: 2024.02.05 12:23:53 -03:00

República Argentina - Poder Ejecutivo Nacional
AÑO DE LA DEFENSA DE LA VIDA, LA LIBERTAD Y LA PROPIEDAD

Certificado - Redacción libre

Número: CE-2024-15797345-APN-ANMAT#MS

CIUDAD DE BUENOS AIRES
Miércoles 14 de Febrero de 2024

Referencia: 1-0047-3110-000229-24-4

CERTIFICADO DE AUTORIZACIÓN E INSCRIPCIÓN

Expediente Nº 1-0047-3110-000229-24-4

La Administración Nacional de Medicamentos, Alimentos y Tecnología Médica (ANMAT) certifica que de acuerdo con lo solicitado por FOC S.R.L. ; se autoriza la inscripción en el Registro Nacional de Productores y Productos de Tecnología Médica (RPPTM), de un nuevo producto con los siguientes datos identificatorios característicos:

DATOS IDENTIFICATORIOS CARACTERÍSTICOS

PM: 1737-37

Nombre descriptivo: Esfinterótomo

Código de identificación y nombre técnico del producto médico, (ECRI-UMDNS):
15-787 Esfinteroscopios

Marca(s) de (los) producto(s) médico(s): LeoMed

Modelos:
SD0420N; SD0425N; SD0430N; SD0435N; SD0720N; SD0725N; SD0730N; SD0735N; SD1020N; SD1025N;

SD1030N; SD1035N; SD1520N; SD1525N; SD1530N; SD1535N; SD3020N; SD3025N; SD3030N; SD3035N;
ST0420N; ST0425N; ST0430N; ST0435N; ST0720N; ST0725N; ST0730N; ST0735N; ST1020N; ST1025N;
ST1030N; ST1035N; ST1520N; ST1525N; ST1530N; ST1535N; ST3020N; ST3025N; ST3030N; ST3035N;
SD0420NGW0206; SD0425NGW0206; SD0430NGW0206; SD0435NGW0206; SD0720NGW0206;
SD0725NGW0206; SD0730NGW0206; SD0735NGW0206; SD1020NGW0206; SD1025NGW0206;
SD1030NGW0206; SD1035NGW0206; SD1520NGW0206; SD1525NGW0206; SD1530NGW0206;
SD1535NGW0206; SD3020NGW0206; SD3025NGW0206; SD3030NGW0206; SD3035NGW0206;
SD0420NGW0209; SD0425NGW0209; SD0430NGW0209; SD0435NGW0209; SD0720NGW0209;
SD0725NGW0209; SD0730NGW0209; SD0735NGW0209; SD1020NGW0209; SD1025NGW0209;
SD1030NGW0209; SD1035NGW0209; SD1520NGW0209; SD1525NGW0209; SD1530NGW0209;
SD1535NGW0209; SD3020NGW0209; SD3025NGW0209; SD3030NGW0209; SD3035NGW0209;
SD0420NGW0204; SD0425NGW0204; SD0430NGW0204; SD0435NGW0204; SD0720NGW0204;
SD0725NGW0204; SD0730NGW0204; SD0735NGW0204; SD1020NGW0204; SD1025NGW0204;
SD1030NGW0204; SD1035NGW0204; SD1520NGW0204; SD1525NGW0204; SD1530NGW0204;
SD1535NGW0204; SD3020NGW0204; SD3025NGW0204; SD3030NGW0204; SD3035NGW0204;
SD0420NGW0208; SD0425NGW0208; SD0430NGW0208; SD0435NGW0208; SD0720NGW0208;
SD0720NGW0208; SD0730NGW0208; SD0735NGW0208; SD1020NGW0208; SD1025NGW0208;
SD1030NGW0208; SD1035NGW0208; SD1520NGW0208; SD1525NGW0208; SD1530NGW0208;
SD1535NGW0208; SD3020NGW0208; SD3025NGW0208; SD3030NGW0208; SD3035NGW0208;
SD0420NGW0217; SD0425NGW0217; SD0430NGW0217; SD0435NGW0217; SD0720NGW0217;
SD0725NGW0217; SD0730NGW0217; SD0735NGW0217; SD1020NGW0217; SD1025NGW0217;
SD1030NGW0217; SD1035NGW0217; SD1520NGW0217; SD1525NGW0217; SD1530NGW0217;
SD1535NGW0217; SD3020NGW0217; SD3025NGW0217; SD3030NGW0217; SD3035NGW0217;
SD0420NGW0218; SD0425NGW0218; SD0430NGW0218; SD0435NGW0218; SD0720NGW0218;
SD0725NGW0218; SD0730NGW0218; SD0735NGW0218; SD1020NGW0218; SD1025NGW0218;
SD1030NGW0218;SD1035NGW0218; SD1520NGW0218; SD1525NGW0218; SD1530NGW0218;
SD1535NGW0218; SD3020NGW0218; SD3025NGW0218; SD3030NGW0218; SD3035NGW0218;
SD0420NGW0220; SD0425NGW0220; SD0430NGW0220; SD0435NGW0220; SD0720NGW0220;
SD0725NGW0220; SD0730NGW0220; SD0735NGW0220; SD1020NGW0220; SD1025NGW0220;
SD1030NGW0220; SD1035NGW0220; SD1520NGW0220; SD1525NGW0220; SD1530NGW0220;
SD1535NGW0220; SD3020NGW0220; SD3025NGW0220; SD3030NGW0220; SD3035NGW0220;
SD0420NGW0221; SD0425NGW0221; SD0430NGW0221; SD0435NGW0221; SD0720NGW0221;
SD0725NGW0221; SD0730NGW0221; SD0735NGW0221; SD1020NGW0221; SD1025NGW0221;
SD1030NGW0221; SD1035NGW0221; SD1520NGW0221; SD1525NGW0221; SD1530NGW0221;
SD1535NGW0221; SD3020NGW0221; SD3025NGW0221; SD3030NGW0221; SD3035NGW0221;
SD0420NGW0228; SD0425NGW0228; SD0430NGW0228; SD0435NGW0228; SD0720NGW0228;
SD0725NGW0228; SD0730NGW0228; SD0735NGW0228; SD1020NGW0228; SD1025NGW0228;
SD1030NGW0228; SD1035NGW0228; SD1520NGW0228; SD1525NGW0228; SD1530NGW022§;
SD1535NGW0228; SD3020NGW0228; SD3025NGW0228; SD3030NGW0228; SD3035NGW0228;
SD0420NGW0230; SD0425NGW0230; SD0430NGW0230; SD0435NGW0230; SD0720NGW0230;
SD0725NGW0230; SD0730NGW0230; SD0735NGW0230; SD1020NGW0230; SD1025NGW0230;
SD1030NGW0230; SD1035NGW0230; SD1520NGW0230; SD1525NGW0230; SD1530NGW0230;
SD1535NGW0230; SD3020NGW0230; SD3025NGW0230; SD3030NGW0230; SD3035NGW0230;
SD0420NGW0232; SD0425NGW0232; SD0430NGW0232; SD0435NGW0232; SD0720NGW0232;
SD0725NGW0232: SD0730NGW0232; SD0735NGW0232; SD1020NGW0232; SD1025NGW0232;
SD1030NGW0232; SD1035NGW0232; SD1520NGW0232; SD1525NGW0232; SD1530NGW0232;

SD1535NGW0232; SD3020NGW0232; SD3025NGW0232; SD3030NGW0232; SD3035NGW0232;
SD0420NGW0233; SD0425NGW0233; SD0430NGW0233; SD0435NGW0233; SD0720NGW0233;
SD0725NGW0233; SD0730NGW0233; SD0735NGW0233; SD1020NGW0233; SD1025NGW0233;
SD1030NGW0233; SD1035NGW0233; SD1520NGW0233; SD1525NGW0233; SD1530NGW0233;
SD1535NGW0233; SD3020NGW0233; SD3025NGW0233; SD3030NGW0233; SD3035NGW0233;
SD0420NGW0241; SD0425NGW0241; SD0430NGW0241; SD0435NGW0241; SD0720NGW0241;
SD0725NGW0241; SD0730NGW0241; SD0735NGW0241; SD1020NGW0241; SD1025NGW0241;
SD1030NGW0241; SD1035NGW0241; SD1520NGW0241; SD1525NGW0241; SD1530NGW0241;
SD1535NGW0241; SD3020NGW0241; SD3025NGW0241; SD3030NGW0241; SD3035NGW0241;
SD0420NGW0242;SD0425NGW0242; SD0430NGW0242; SD0435NGW0242; SD0720NGW0242;
SD0725NGW0242; SD0730NGW0242; SD0735NGW0242; SD1020NGW0242; SD1025NGW0242;
SD1030NGW0242; SD1035NGW0242; SD1520NGW0242; SD1525NGW0242; SD1530NGW0242;
SD1535NGW0242; SD3020NGW0242; SD3025NGW0242; SD3030NGW0242; SD3035NGW0242;
SD0420NGW0244; SD0425NGW0244; SD0430NGW0244; SD0435NGW0244; SD0720NGW0244;
SD0725NGW0244; SD0730NGW0244; SD0735NGW0244; SD1020NGW0244; SD1025NGW0244;
SD1030NGW0244; SD1035NGW0244; SD1520NGW0244; SD1525NGW0244; SD1530NGW0244:
SD1535NGW0244; SD3020NGW0244; SD3025NGW0244; SD3030NGW0244; SD3035NGW0244;
SD0420NGW0245; SD0425NGW0245; SD0430NGW0245; SD0435NGW0245; SD0720NGW0245;
SD0725NGW0245; SD0730NGW0245; SD0735NGW0245; SD1020NGW0245; SD1025NGW0245;
SD1030NGW0245; SD1035NGW0245; SD1520NGW0245; SD1525NGW0245; SD1530NGW0245;
SD1535NGW0245; SD3020NGW0245; SD3025NGW0245; SD3030NGW0245; SD3035NGW0245:
ST0420NGW0206; ST0425NGW0206; ST0430NGW0206; ST0435NGW0206; ST0720NGW0206;
ST0725NGW0206; ST0730NGW0206; ST0735NGW0206; ST1020NGW0206; ST1025NGW0206;
ST1030NGW0206; ST1035NGW0206; ST1520NGW0206; ST1525NGW0206; ST1530NGW0206;
ST1535NGW0206; ST3020NGW0206; ST3025NGW0206; ST3030NGW0206; ST3035NGW0206;
ST0420NGW0209; ST0425NGW0209; ST0430NGW0209; ST0435NGW0209; ST0720NGW0209;
ST0725NGW0209; ST0730NGW0209; ST0735NGW0209; ST1020NGW0209; ST1025NGW0209;
ST1030NGW0209; ST1035NGW0209; ST1520NGW0209; ST1525NGW0209; ST1530NGW0209;
ST1535NGW0209; ST3020NGW0209; ST3025NGW0209; ST3030NGW0209; ST3035NGW0209:
ST0420NGW0204; ST0425NGW0204; ST0430NGW0204; ST0435NGW0204; ST0720NGW0204;
ST0725NGW0204; ST0730NGW0204; ST0735NGW0204; ST1020NGW0204; ST1025NGW0204;
ST1030NGW0204; ST1035NGW0204; ST1520NGW0204; ST1525NGW0204; ST1530NGW0204;
ST1535NGW0204; ST3020NGW0204; ST3025NGW0204; ST3030NGW0204; ST3035NGW0204:
ST0420NGW0208; ST0425NGW0208; ST0430NGW0208; ST0435NGW0208; ST0720NGW0208;
ST0725NGW0208; ST0730NGW0208; ST0735NGW0208; ST1020NGW0208; ST1025NGW0208;
ST1030NGW0208; ST1035NGW0208; ST1520NGW0208; ST1525NGW0208; ST1530NGW0208;
ST1535NGW0208; ST3020NGW0208; ST3025NGW0208; ST3030NGW0208; ST3035NGW0208;
ST0420NGW0217; ST0425NGW0217; ST0430NGW0217; ST0435NGW0217; ST0720NGW0217;
ST0725NGW0217; ST0730NGW0217; ST0735NGW0217; ST1020NGW0217; ST1025NGW0217;
ST1030NGW0217; ST1035NGW0217; ST1520NGW0217; ST1525NGW0217; ST1530NGW0217;
ST1535NGW0217; ST3020NGW0217; ST3025NGW0217; ST3030NGW0217; ST3035NGW0217;
ST0420NGW0218; ST0425NGW0218; ST0430NGW0218; ST0435NGW0218; ST0720NGW0218;
ST0725NGW0218; ST0730NGW0218; ST0735NGW0218; ST1020NGW0218; ST1025NGW0218;
ST1030NGW0218; ST1035NGW0218; ST1520NGW0218; ST1525NGW0218; ST1530NGW0218;
ST1535NGW0218; ST3020NGW0218; ST3025NGW0218; ST3030NGW0218; ST3035NGW0218;
ST0420NGW0220; ST0425NGW0220; ST0430NGW0220; ST0435NGW0220; ST0720NGW0220;

ST0725NGW0220; ST0730NGW0220; ST0735NGW0220; ST1020NGW0220; ST1025NGW0220;
ST1030NGW0220; ST1035NGW0220; ST1520NGW0220; ST1525NGW0220; ST1530NGW0220;
ST1535NGW0220; ST3020NGW0220; ST3025NGW0220; ST3030NGW0220; ST3035NGW0220;
ST0420NGW0221; ST0425NGW0221; ST0430NGW0221; ST0435NGW0221; ST0720NGW0221;
ST0725NGW0221; ST0730NGW0221; ST0735NGW0221; ST1020NGW0221; ST1025NGW0221;
ST1030NGW0221; ST1035NGW0221; ST1520NGW0221; ST1525NGW0221; ST1530NGW0221;
ST1535NGW0221; ST3020NGW0221; ST3025NGW0221; ST3030NGW0221; ST3035NGW0221;
ST0420NGW0228; ST0425NGW0228; ST0430NGW0228; ST0435NGW0228; ST0720NGW0228;
ST0725NGW0228; ST0730NGW0228; ST0735NGW0228; ST1020NGW0228; ST1025NGW0228;
ST1030NGW0228; ST1035NGW0228; ST1520NGW0228; ST1525NGW0228; ST1530NGW0228;
ST1535NGW0228; ST3020NGW0228; ST3025NGW0228; ST3030NGW0228; ST3035NGW0228;
ST0420NGW0230; ST0425NGW0230; ST0430NGW0230; ST0435NGW0230; ST0720NGW0230;
ST0725NGW0230; ST0730NGW0230; ST0735NGW0230; ST1020NGW0230; ST1025NGW0230;
ST1030NGW0230; ST1035NGW0230; ST1520NGW0230; ST1525NGW0230; ST1530NGW0230;
ST1535NGW0230; ST3020NGW0230; ST3025NGW0230; ST3030NGW0230; ST3035NGW0230;
ST0420NGW0232; ST0425NGW0232; ST0430NGW0232; ST0435NGW0232; ST0720NGW0232;
ST0725NGW0232; ST0730NGW0232; ST0735NGW0232; ST1020NGW0232; ST1025NGW0232;
ST1030NGW0232; ST1035NGW0232; ST1520NGW0232; ST1525NGW0232; ST1530NGW0232;
ST1535NGW0232; ST3020NGW0232; ST3025NGW0232; ST3030NGW0232; ST3035NGW0232;
ST0420NGW0233; ST0425NGW0233; ST0430NGW0233; ST0435NGW0233; ST0720NGW0233;
ST0725NGW0233; ST0730NGW0233; ST0735NGW0233; ST1020NGW0233; ST1025NGW0233;
ST1030NGW0233; ST1035NGW0233; ST1520NGW0233; ST1525NGW0233; ST1530NGW0233;
ST1535NGW0233; ST3020NGW0233; ST3025NGW0233; ST3030NGW0233; ST3035NGW0233;
ST0420NGW0241;ST0425NGW0241; ST0430NGW0241; ST0435NGW0241; ST0720NGW0241;
ST0725NGW0241; ST0730NGW0241; ST0735NGW0241; ST1020NGW0241; ST1025NGW0241;
ST1030NGW0241; ST1035NGW0241; ST1520NGW0241; ST1525NGW0241; ST1530NGW0241;
ST1535NGW0241; ST3620NGW0241; ST3025NGW0241; ST3030NGW0241; ST3035NGW0241;
ST0420NGW0242; ST0420NGW0242; ST0430NGW0242; ST0435NGW0242; ST0720NGW0242;
ST0725NGW0242; ST0730NGW0242; ST0735NGW0242; ST1020NGW0242; ST1025NGW0242;
ST1030NGW0242; ST1035NGW0242; ST1520NGW0242; ST1525NGW0242; ST1530NGW0242;
ST1535NGW0242; ST3020NGW0242; ST3025NGW0242; ST3030NGW0242; ST3035NGW0242;
ST0420NGW0244; ST0425NGW0244; ST0430NGW0244; ST0435NGW0244; ST0720NGW0244;
ST0725NGW0244; ST0730NGW0244; ST0735NGW0244; ST1020NGW0244; ST1025NGW0244;
ST1030NGW0244; ST1035NGW0244; ST1520NGW0244; ST1525NGW0244; ST1530NGW0244;
ST1535NGW0244; ST3020NGW0244; ST3025NGW0244; ST3030NGW0244; ST3035NGW0244;
ST0420NGW0245; ST0425NGW0245; ST0430NGW0245; ST0435NGW0245; ST0720NGW0245;
ST0725NGW0245; ST0730NGW0245; ST0735NGW0245; ST1020NGW0245; ST1025NGW0245;
ST1030NGW0245; ST1035NGW0245; ST1520NGW0245; ST1525NGW0245; ST1530NGW0245;
ST1535NGW0245; ST3020NGW0245; ST3025NGW0245; ST3030NGW0245; ST3035NGW0245; RSD0420N;
RSD0425N; RSD0430N; RSD0435N; RSD0720N; RSD0725N; RSD0730N; RSD0735N; RSD1020N;
RSD1025N; RSD1030N; RSD1035N; RSD1520N; RSD1525N; RSD1530N; RSD1535N; RSD3020N;
RSD3025N; RSD3030N; RSD3035N; RPD0420N; RPD0425N; RPD0430N; RPD0435N; RPD0720N;
RPD0725N; RPD0730N; RPD0735N; RPD1020N; RPD1025N; RPD1030N; RPD1035N; RPD1520N;
RPD1525N; RPD1530N; RPD1535N; RPD3020N; RPD3025N; RPD3030N; RPD3035N; RST0420N;
RST0425N; RST0430N; RST0435N; RST0720N; RST0725N; RST0730N; RST0735N; RST1020N; RST1025N;
RST1030N; RST1035N; RST1520N; RST1525N; RST1530N; RST1535N; RST3020N; RST3025N; RST3030N;

RST3035N; RPT0420N; RPT0425N; RPT0430N; RPT0435N; RPT0720N; RPT0725N; RPT0730N; RPT0735N; RPT1020N; RPT1025N; RPT1030N; RPT1035N; RPT1520N; RPT1525N; RPT1530N; RPT1535N; RPT3020N; RPT3025N; RPT3030N; RPT3035N; RSD0420R; RSD0425R; RSD0430R; RSD0435R; RSD0720R; RSD0725R; RSD0730R; RSD0735R; RSD1020R; RSD1025R; RSD1030R; RSD1035R; RSD1520R; RSD1525R; RSD1530R;RSD1535R; RSD3020R; RSD3025R; RSD3030R; RSD3035R; RPD0420R; RPD0425R; RPD0430R; RPD0435R; RPD0720R; RPD0725R; RPD0730R; RPD0735R; RPD1020R; RPD1025R; RPD1030R; RPD1035R; RPD1520R; RPD1525R; RPD1530R; RPD1535R; RPD3020R; RPD3025R; RPD3030R; RPD3035R; RST0420R; RST0425R; RST0430R; RST0435R; RST0720R; RST0725R; RST0730R; RST0735R; RST1020R; RST1025R; RST1030R; RST1035R; RST1520R; RST1525R; RST1530R; RST1535R; RST3020R; RST3025R; RST3030R; RST3035R; RPT0420R; RPT0425R; RPT0430R; RPT0435R; RPT0T20R; RPT0725R; RPT0730R; RPT0735R; RPT1020R; RPT1025R; RPT1030R; RPT1035R; RPT1520R; RPT1525R; RPT1530R; RPT1535R; RPT3020R; RPT3025R; RPT3030R; RPT3035R; ST0420R; ST0425R; ST0430R; ST0435R; ST0720R; ST0725R; ST0730R; ST0735R; ST1020R; ST1025R; ST1030R; ST1035R; ST1520R; ST1525R; ST1530R; ST1535R; ST3020R; ST30258; ST3030R; ST3035R; ST0420RGW0206; ST0425RGW0206; ST0430RGW0206; ST0435RGW0206; ST0720RGW0206; ST0725RGW0206; ST0730RGW0206; ST0735RGW0206; ST1020RGW0206; ST1025RGW0206; ST1030RGW0206; ST1035RGW0206; ST1520RGW0206; ST1525RGW0206; ST1530RGW0206; ST1535RGW0206; ST3020RGW0206; ST3025RGW0206; ST3030RGW0206; ST3035RGW0206; ST0420RGW0209; ST0425RGW0209; ST0430RGW0209; ST0L3SRGW0209; ST0720RGW0209; ST0725RGW0209; ST0730RGW0209; ST0735RGW0209; ST1020RGW0209; ST1025RGW0209; ST1030RGW0209; ST1035RGW0209; ST1520RGW0209; ST1525RGW0209; ST1530RGW0209; ST1535RGW0209; ST3020RGW0209; ST3025RGW0209; ST3030RGW0209; ST3035RGW0209; ST0420RGW0230; ST0425RGW0230; ST0430RGW0230; ST0435RGW0230; ST0720RGW0230; ST0725RGW0230; ST0730RGW0230; ST0735RGW0230; ST1020RGW0230; ST1025RGW0230; ST1030RGW0230; ST1035RGW0230; ST1520RGW0230; ST1525RGW0230; ST1530RGW0230; ST1535RGW0230; ST3020RGW0230; ST3025RGW0230; ST3030RGW0230; ST3035RGW0230; ST0420RGW0233; ST0425RGW0233; ST0430RGW0233; ST0435RGW0233; ST0720RGW0233; ST0725RGW0233; ST0730RGW0233; ST0735RGW0233; ST1020RGW0233; ST1025RGW0233; ST1030RGW0233; ST1035RGW0233; ST1520RGW0233; ST1525RGW0233; ST1530RGW0233; ST1535RGW0233; ST3020RGW0233; ST3025RGW0233; ST3030RGW0233; ST3035RGW0233; ST0420RGW0204; ST0425RGW0204; ST0430RGW0204; ST043SRGW0204; ST0720RGW0204; ST0725RGW0204; ST0730RGW0204; ST0735RGW0204; ST1020RGW0204;ST1025RGW0204; ST1030RGW0204; ST1035RGW0204; ST1520RGW0204; ST1525RGW0204; ST1530RGW0204; ST1535RGW0204; ST3020RGW0204; ST3025RGW0204; ST3030RGW0204; ST3035RGW0204; ST0420RGW0208; ST0425RGW0208; ST0430RGW0208; ST0435RGW0208; ST0720RGW0208; ST0725RGW0208; ST0730RGW0208; ST0735RGW0208; ST1020RGW0208; ST1025RGW0208; ST1030RGW0208; ST1035RGW0208; ST1520RGW0208; ST1525RGW0208; ST1530RGW0208; ST1535RGW0208; ST3020RGW0208; ST3025RGW0208; ST3030RGW0208; ST3035RGW0208; ST0420RGW0217; ST0425RGW0217; STG430RGW0217; ST0435RGW0217; ST0720RGW0217; ST0725RGW0217; ST0730RGW0217; ST0735RGW0217; ST1020RGW0217; ST1025RGW0217; ST1030RGW0217; ST1035RGW0217; ST1520RGW0217; ST1525RGW0217; ST1530RGW0217; ST1535RGW0217; ST3020RGW0217; ST3025RGW0217; ST3030RGW0217; ST3035RGW0217; ST0420RGW0218; ST0425RGW0218; ST0430RGW0218; ST0435RGW0218; ST0720RGW0218; ST0725RGW0218; ST0730RGW0218; ST0735RGW0218; ST1020RGW0218; ST1025RGW0218; ST1030RGW0218; ST1035RGW0218; ST1520RGW0218; ST1525RGW0218; ST1530RGW0218; ST1535RGW0218; ST3020RGW0218; ST3025RGW0218; ST3030RGW0218; ST3035RGW0218; ST0420RGW0220;

ST0425RGW0220; ST0430RGW0220; ST0435RGW0220; ST0720RGW0220; ST0725RGW0220;
ST0730RGW0220; ST0735RGW0220; ST1020RGW0220; ST1025RGW0220; ST1030RGW0220;
ST1035RGW0220; ST1520RGW0220; ST1525RGW0220; ST1530RGW0220; ST1535RGW0220;
ST3020RGW0220; ST3025RGW0220; ST3030RGW0220; ST3035RGW0220; ST0420RGW0221;
ST0425RGW0221; ST0430RGW0221; ST0435RGW0221; ST0720RGW0221; ST0725RGW0221;
ST0730RGW0221; ST0735RGW0221; ST1020RGW0221; ST1025RGW0221; ST1030RGW0221;
ST1035RGW0221; ST1520RGW0221; ST1525RGW0221; ST1530RGW0221; ST1535RGW0221;
ST3020RGW0221; ST3025RGW0221; ST3030RGW0221; ST3035RGW0221; ST0420RGW0228;
ST0425RGW0228; ST0430RGW0228; ST0435RGW0228; ST0720RGW0228; ST0725RGW0228;
ST0730RGW0228; ST0735RGW0228; ST1020RGW0228; ST1025RGW0228; ST1030RGW0228;
ST1035RGW0228; ST1520RGW0228; ST1525RGW0228; ST1530RGW0228; ST1535RGW0228;
ST3020RGW0228; ST3025RGW0228; ST3030RGW0228; ST3035RGW0228; ST0420RGW0232;
ST0425RGW0232; ST0430RGW0232; ST0435RGW0232; ST0720RGW0232; ST0725RGW0232;
ST0730RGW0232; ST0735RGW0232; ST1020RGW0232; ST1025RGW0232; ST1030RGW0232;
ST1035RGW0232; ST1520RGW0232; ST1525RGW0232; ST1530RGW0232; ST1535RGW0232;
ST3020RGW0232; ST3025RGW0232; ST3030RGW0232;ST3035RGW0232; ST0420RGW0241;
ST0425RGW0241; ST0430RGW0241; ST0435RGW0241; ST0720RGW0241; ST0725RGW0241;
ST0730RGW0241; ST0735RGW0241; ST1020RGW0241; ST1025RGW0241; ST1030RGW0241;
ST1035RGW0241; ST1520RGW0241; ST1525RGW0241; ST1530RGW0241; ST1535RGW0241;
ST3020RGW0241; ST3025RGW0241; ST3030RGW0241; ST3035RGW0241; ST0420RGW0242;
ST0425RGW0242; ST0430RGW0242; ST0435RGW0242; ST0720RGW0242; ST0725RGW0242;
ST0730RGW0242; ST0735RGW0242; ST1020RGW0242; ST1025RGW0242; ST1080RGW0242;
ST1035RGW0242; ST1520RGW0242; ST1525RGW0242; ST1530RGW0242; ST1535RGW0242;
ST3020RGW0242; ST3025RGW0242; ST3030RGW0242; ST3035RGW0242; ST0420RGW0244;
ST0425RGW0244; ST0430RGW0244; ST0435RGW0244; ST0T20RGW0244; ST0725RGW0244;
ST0730RGW0244; ST0735RGW0244; ST1020RGW0244; ST1025RGW0244; ST1030RGW0244;
ST1035RGW0244; ST1520RGW0244; ST1525RGW0244; ST1530RGW0244; ST1535RGW0244;
ST3020RGW0244; ST3025RGW0244; ST3030RGW0244; ST3035RGW0244; ST0420RGW0245;
ST0425RGW0245; ST0430RGW0245; ST0435RGW0245; ST0720RGW0245; ST0725RGW0245;
ST0730RGW0245; ST0735RGW0245; ST1020RGW0245; ST1025RGW0245; ST1030RGW0245;
ST1035RGW0245; ST1520RGW0245; ST1525RGW0245; ST1530RGW0245; ST1535RGW0245;
ST3020RGW0245; ST3025RGW0245; ST3030RGW0245; ST3035RGW0245; RST0720RGW0206;
RST0725RGW0206; RST0730RGW0206; RST0735RGW0206; RST1020RGW0206; RST1025RGW0206;
RST1030RGW0206; RST1035RGW0206; RST1520RGW0206; RST1525RGW0206; RST1530RGW0206;
RST1535RGW0206; RST3020RGW0206; RST3025RGW0206; RST3030RGW0206; RST3035RGW0206;
RST0420RGW0209; RST0425RGW0209; RST0430RGW0209; RST0435RGW0209; RST0720RGW0209;
RST0725RGW0209; RST0730RGW0209; RST0735RGW0209; RST1020RGW0209; RST1025RGW0209;
RST1030RGW0209; RST1035RGW0209; RST1520RGW0209; RST1525RGW0209; RST1530RGW0209;
RST1535RGW0209; RST3020RGW0209; RST3025RGW0209; RST3030RGW0209; RST3035RGW0209;
RST0420RGW0230; RST0425RGW0230; RST0430RGW0230; RST0435RGW0230; RST0720RGW0230;
RST0725RGW0230; RST0730RGW0230; RST0735RGW0230; RST1020RGW0230;
RST1025RGW0230;RST1030RGW0230; RST1035RGW0230; RST1520RGW0230; RST1525RGW0230;
RST1530RGW0230; RST1535RGW0230; RST3020RGW0230; RST3025RGW0230; RST3030RGW0230;
RST3035RGW0230; RST0420RGW0233; RST0425RGW0233; RST0430RGW0233; RST0435RGW0233;
RST0720RGW0233; RST0725RGW0233; RST0730RGW0233; RST0735RGW0233; RST1020RGW0233;
RST1025RGW0233; RST1030RGW0233; RST1035RGW0233; RST1520RGW0233; RST1525RGW0233;

RST1530RGW0233; RST1535RGW0233; RST3020RGW0233; RST3025RGW0233; RST3030RGW0233; RST3035RGW0233; RST0420RGW0204; RST0425RGW0204; RST0430RGW0204; RST0435RGW0204; RST0720RGW0204; RST0725RGW0204; RST0730RGW0204; RST0735RGW0204; RST1020RGW0204; RST1025RGW0204; RST1030RGW0204; RST1035RGW0204; RST1520RGW0204; RST1525RGW0204; RST1530RGW0204; RST1535RGW0204; RST3020RGW0204; RST3025RGW0204; RST3030RGW0204; RST3035RGW0204; RST0420RGW0208; RST0425RGW0208; RST0430RGW0208; RST0435RGW0208; RST0720RGW0208; RST0725RGW0208; RST0730RGW0208; RST0735RGW0208; RST1020RGW0208; RST1025RGW0208; RST1030RGW0208; RST1035RGW0208; RST1520RGW0208; RST1525RGW0208; RST1530RGW0208; RST1535RGW0208; RST3020RGW0208; RST3025RGW0208; RST3030RGW0208; RST3035RGW0208; RST0420RGW0217; RST0425RGW0217; RST0430RGW0217; RST0435RGW0217; RST0720RGW0217; RST0725RGW0217; RST0730RGW0217; RST0735RGW0217; RST1020RGW0217; RST1025RGW0217; RST1030RGW0217; RST1035RGW0217; RST1520RGW0217; RST1525RGW0217; RST1530RGW0217; RST1535RGW0217; RST3020RGW0217; RST3025RGW0217; RST3030RGW0217; RST3035RGW0217; RST0420RGW0218; RST0425RGW0218; RST0430RGW0218; RST0435RGW0218; RST0720RGW0218; RST0725RGW0218; RST0730RGW0218; RST0735RGW0218; RST1020RGW0218; RST1025RGW0218;RST1030RGW0218; RST1035RGW0218; RST1520RGW0218; RST1525RGW0218; RST1530RGW0218; RST1535RGW0218; RST3020RGW0218; RST3025RGW0218; RST3030RGW0218; RST3035RGW0218; RST0420RGW0220; RST0425RGW0220; RST0430RGW0220; RST0435RGW0220; RST0720RGW0220; RST0725RGW0220; RST0730RGW0220; RST0735RGW0220; RST1020RGW0220; RST1025RGW0220; RST1030RGW0220; RST1035RGW0220; RST1520RGW0220; RST1525RGW0220; RST1530RGW0220; RST1535RGW0220; RST3020RGW0220; RST3025RGW0220; RST3030RGW0220; RST3035RGW0220; RST0420RGW0221; RST0425RGW0221; RST0430RGW0221; RST0435RGW0221; RST0720RGW0221; RST0725RGW0221; RST0730RGW0221; RST0735RGW0221; RST1020RGW0221; RST1025RGW0221; RST1030RGW0221; RST1035RGW0221; RST1520RGW0221; RST1525RGW0221; RST1530RGW0221; RST1535RGW0221; RST3020RGW0221; RST3025RGW0221; RST3030RGW0221; RST3035RGW0221; RST0420RGW0228; RST0425RGW0228; RST0430RGW0228; RST0435RGW0228; RST0720RGW0228; RST0725RGW0228; RST0730RGW0228; RST0735RGW0228; RST1020RGW0228; RST1025RGW0228; RST1030RGW0228; RST1035RGW0228; RST1520RGW0228; RST1525RGW0228; RST1530RGW0228; RST1535RGW0228; RST3020RGW0228; RST3025RGW0228; RST3030RGW0228; RST3035RGW0228; RST0420RGW0232; RST0425RGW0232; RST0430RGW0232; RST0435RGW0232; RST0720RGW0232; RST0725RGW0232; RST0730RGW0232; RST0735RGW0232; RST1020RGW0232; RST1025RGW0232; RST1030RGW0232; RST1035RGW0232; RST1520RGW0232; RST1525RGW0232; RST1530RGW0232; RST1535RGW0232; RST3020RGW0232; RST3025RGW0232; RST3030RGW0232; RST3035RGW0232; RST0420RGW0241; RST0425RGW0241; RST0430RGW0241; RST0435RGW0241; RST0720RGW0241; RST0725RGW0241; RST0730RGW0241; RST0735RGW0241; RST1020RGW0241; RST1025RGW0241;RST1030RGW0241; RST1035RGW0241; RST1520RGW0241; RST1525RGW0241; RST1530RGW0241; RST1535RGW0241; RST3020RGW0241; RST3025RGW0241; RST3030RGW0241; RST3035RGW0241; RST0420RGW0242; RST0425RGW0242; RST0430RGW0242; RST0435RGW0242; RST0720RGW0242; RST0725RGW0242; RST0730RGW0242; RST0735RGW0242; RST1020RGW0242; RST1025RGW0242; RST1030RGW0242; RST1035RGW0242; RST1520RGW0242; RST1525RGW0242; RST1530RGW0242; RST1535RGW0242; RST3020RGW0242; RST3025RGW0242; RST3030RGW0242; RST3035RGW0242; RST0420RGW0244; RST0425RGW0244; RST0430RGW0244; RST0435RGW0244; RST0720RGW0244; RST0725RGW0244; RST0730RGW0244; RST0735RGW0244; RST1020RGW0244; RST1025RGW0244; RST1030RGW0244; RST1035RGW0244; RST1520RGW0244; RST1525RGW0244; RST1530RGW0244; RST1535RGW0244; RST3020RGW0244; RST3025RGW0244; RST3030RGW0244; RST3035RGW0244; RST0420RGW0245; RST0425RGW0245; RST0430RGW0245; RST0435RGW0245;

RST0720RGW0245; RST0725RGW0245; RST0730RGW0245; RST0735RGW0245; RST1020RGW0245; RST1025RGW0245; RST1030RGW0245; RST1035RGW0245; RST1520RGW0245; RST1525RGW0245; RST1530RGW0245; RST1535RGW0245; RST3020RGW0245; RST3025RGW0245; RST3030RGW0245; RST3035RGW0245; RSD0420NGW0206; RSD0425NGW0206; RSD0430NGW0206; RSD0435NGW0206; RSD0720NGW0206; RSD0725NGW0206; RSD0730NGW0206; RSD0735NGW0206; RSD1020NGW0206; RSD1025NGW0206; RSD1030NGW0206; RSD1035NGW0206; RSD1520NGW0206; RSD1525NGW0206; RSD1530NGW0206; RSD1535NGW0206; RSD3020NGW0206; RSD3025NGW0206; RSD3030NGW0206; RSD3035NGW0206; RSD0420NGW0209; RSD0425NGW0209; RSD0430NGW0209; RSD0435NGW0209; RSD0720NGW0209; RSD0725NGW0209; RSD0730NGW0209; RSD0735NGW0209; RSD1020NGW0209; RSD1025NGW0209;RSD1030NGW0209; RSD1035NGW0209; RSD1520NGW0209; RSD1525NGW0209; RSD1530NGW0209; RSDTS35NGW0209; RSD3020NGW0209; RSD3025NGW0209; RSD3030NGW0209; RSD3035NGW0209; RSD0420NGW0230; RSD0425NGW0230; RSD0430NGW0230; RSD0435NGW0230; RSD0720NGW0230; RSD0725NGW0230; RSD0730NGW0230; RSD0735NGW0230; RSD1020NGW0230; RSD1025NGW0230; RSD1030NGW0230; RSD1035NGW0230; RSD1520NGW0230; RSD1525NGW0230; RSD1530NGW0230; RSD1535NGW0230; RSD3020NGW0230; RSD3025NGW0230; RSD3030NGW0233; RSD3035NGW0230; RSD0420NGW0233; RSD0425NGW0233; RSD0430NGW0233; RSD0435NGW0233; RSD0720NGW0233; RSD0725NGW0233; RSD0730NGW0233; RSD0735NGW0233; RSD1020NGW0233; RSD1025NGW0233; RSD1030NGW0233; RSD1035NGW0233; RSD1520NGW0233; RSD1525NGW0233; RSD1530NGW0233; RSD1535NGW0233; RSD3020NGW0233; RSD3025NGW0233; RSD3030NGW0233; RSD3035NGW0233; RSD0420NGW0204; RSD0425NGW0204; RSD0430NGW0204; RSD0435NGW0204; RSD0720NGW0204; RSD0725NGW0204; RSD0730NGW0204; RSD0735NGW0204; RSD1020NGW0204; RSD1025NGW0204; RSD1030NGW0204; RSD1035NGW0204; RSD1520NGW0204; RSD1525NGW0204; RSD1530NGW0204; RSD1535NGW0204; RSD3020NGW0204; RSD3025NGW0204; RSD3030NGW0204; RSD3035NGW0204; RSD0420NGW0208; RSD0425NGW0208; RSD0430NGW0208; RSD0435NGW0208; RSD0720NGW0208; RSD0725NGW0208; RSD0730NGW0208; RSD0735NGW0208; RSD1020NGW0208; RSD1025NGW0208; RSD1030NGW0208; RSD1035NGW0208; RSD1520NGW0208; RSD1525NGW0208; RSD1530NGW0208; RSD1535NGW0208; RSD3020NGW0208; RSD3025NGW0208; RSD3030NGW0208; RSD3035NGW0208; RSD0420NGW0217; RSD0425NGW0217; RSD0430NGW0217; RSD0435NGW0217; RSD0720NGW0217; RSD0725NGW0217; RSD0730NGW0217; RSD0735NGW0217; RSD1020NGW0217; RSD1025NGW0217;RSD1030NGW0217; RSD1035NGW0217; RSD1520NGW0217; RSD1525NGW0217; RSD1530NGW0217; RSD1535NGW0217; RSD3020NGW0217; RSD3025NGW0217; RSD3030NGW0217; RSD3035NGW0217; RSD0420NGW0218; RSD0425NGW0218; RSD0430NGW0218; RSD0435NGW0218; RSD0720NGW0218; RSD0725NGW0218; RSD0730NGW0218; RSD0735NGW0218; RSD1020NGW0218; RSD1025NGW0218; RSD1030NGW0218; RSD1035NGW0218; RSD1520NGW0218; RSD1525NGW0218; RSD1530NGW0218; RSD1535NGW0218; RSD3020NGW0218; RSD3025NGW0218; RSD3030NGW0218; RSD3035NGW0218; RSD0420NGW0220; RSD0425NGW0220; RSD0430NGW0220; RSD0435NGW0220; RSD0720NGW0220; RSD0725NGW0220; RSD0730NGW0220; RSD0735NGW0220; RSD1020NGW0220; RSD1025NGW0220; RSD1030NGW0220; RSD1035NGW0220; RSD1520NGW0220; RSD1525NGW0220; RSD1530NGW0220; RSD1535NGW0220; RSD3020NGW0220; RSD3025NGW0220; RSD3030NGW0220; RSD3035NGW0220; RSD0420NGW0221; RSD0425NGW0221; RSD0430NGW0221; RSD0435NGW0221; RSD0720NGW0221; RSD0725NGW0221; RSD0730NGW0221; RSD0735NGW0221; RSD1020NGW0221; RSD1025NGW0221; RSD1030NGW0221; RSD1035NGW0221; RSD1520NGW0221; RSD1525NGW0221; RSD1530NGW0221; RSD1535NGW0221; RSD3020NGW0221; RSD3025NGW0221; RSD3030NGW0221; RSD3035NGW0221; RSD0420NGW0228; RSD0425NGW0228; RSD0430NGW0228; RSD0435NGW0228; RSD0720NGW0228; RSD0725NGW0228; RSD0730NGW0228; RSD0735NGW0228; RSD1020NGW0228; RSD1025NGW0228; RSD1030NGW0228; RSD1035NGW0228; RSD1520NGW0228; RSD1525NGW0228;

RSD1530NGW0228; RSD1535NGW0228; RSD3020NGW0228; RSD3025NGW0228; RSD3030NGW0228; RSD3035NGW0228; RSD0420NGW0232; RSD0425NGW0232; RSD0430NGW0232; RSD0435NGW0232; RSD0720NGW0232; RSD0725NGW0232; RSD0730NGW0232; RSD0735NGW0232; RSD1020NGW0232; RSD1025NGW0232; RSD1030NGW0232; RSD1035NGW0232; RSD1520NGW0232; RSD1525NGW0232; RSD1530NGW0232; RSD1535NGW0232; RSD3020NGW0232; RSD3025NGW0232; RSD3030NGW0232; RSD3035NGW0232; RSD0420NGW0241; RSD0425NGW0241; RSD0430NGW0241; RSD0435NGW0241; RSD0720NGW0241; RSD0725NGW0241; RSD0730NGW0241; RSD0735NGW0241; RSD1020NGW0241; RSD1025NGW0241; RSD1030NGW0241; RSD1035NGW0241; RSD1520NGW0241; RSD1525NGW0241; RSD1530NGW0241; RSD1535NGW0241; RSD3020NGW0241; RSD3025NGW0241; RSD3030NGW0241; RSD3035NGW0241; RSD0420NGW0242; RSD0425NGW0242; RSD0430NGW0242; RSD0435NGW0242; RSD0720NGW0242; RSD0725NGW0242; RSD0730NGW0242; RSD0735NGW0242; RSD1020NGW0242; RSD1025NGW0242; RSD1030NGW0242; RSD1035NGW0242; RSD1520NGW0242; RSD1525NGW0242; RSD1530NGW0242; RSD1535NGW0242; RSD3020NGW0242; RSD3025NGW0242; RSD3030NGW0242; RSD3035NGW0242; RSD0420NGW0244; RSD0425NGW0244; RSD0430NGW0244; RSD0435NGW0244; RSD0720NGW0244; RSD0725NGW0244; RSD0730NGW0244; RSD0735NGW0244; RSD1020NGW0244; RSD1025NGW0244; RSD1030NGW0244; RSD1035NGW0244; RSD1520NGW0244; RSD1525NGW0244; RSD1530NGW0244; RSD1535NGW0244; RSD3020NGW0244; RSD3025NGW0244; RSD3030NGW0244; RSD3035NGW0244; RSD0420NGW0245; RSD0425NGW0245; RSD0430NGW0245; RSD0435NGW0245; RSD0720NGW0245; RSD0725NGW0245; RSD0730NGW0245; RSD0735NGW0245; RSD1020NGW0245; RSD1025NGW0245; RSD1030NGW0245; RSD1035NGW0245; RSD1520NGW0245; RSD1525NGW0245; RSD1530NGW0245; RSD1535NGW0245; RSD3020NGW0245; RSD3025NGW0245; RSD3030NGW0245; RSD3035NGW0245; RST0420NGW0206; RST0425NGW0206; RST0430NGW0206; RST0435NGW0206; RST0720NGW0206; RST0725NGW0206; RST0730NGW0206; RST0735NGW0206; RST1020NGW0206; RST1025NGW0206;RST1030NGW0206; RST1035NGW0206; RST1520NGW0206; RST1525NGW0206; RST1530NGW0206; RST1535NGW0206; RST3020NGW0206; RST3025NGW0206; RST3030NGW0206; RST3035NGW0206; RST0420NGW0209; RST0425NGW0209; RST0430NGW0209; RST0435NGW0209; RST0720NGW0209; RST0725NGW0209; RST0730NGW0209; RST0735NGW0209; RST1020NGW0209; RST1025NGW0209; RST1030NGW0209; RST1035NGW0209; RST1520NGW0209; RST1525NGW0209; RST1530NGW0209; RST1535NGW0209; RST3020NGW0209; RST3025NGW0209; RST3030NGW0209; RST3035NGW0209; RST0420NGW0230; RST0425NGW0230; RST0430NGW0230; RST0435NGW0230; RST0720NGW0230; RST0725NGW0230; RST0730NGW0230; RST0735NGW0230; RST1020NGW0230; RST1025NGW0230; RST1030NGW0230; RST1035NGW0230; RST1520NGW0230; RST1525NGW0230; RST1530NGW0230; RST1535NGW0230; RST3020NGW0230; RST3025NGW0230; RST3030NGW0230; RST3035NGW0230; RST0420NGW0233; RST0425NGW0233; RST0430NGW0233; RST0435NGW0233; RST0720NGW0233; RST0725NGW0233; RST0730NGW0233; RST0735NGW0233; RST1020NGW0233; RST1025NGW0233; RST1030NGW0233; RST1035NGW0233; RST1520NGW0233; RST1525NGW0233; RST1530NGW0233; RST1535NGW0233; RST3020NGW0233; RST3025NGW0233; RST3030NGW0233; RST3035NGW0233; RST0420NGW0204; RST0425NGW0204; RST0430NGW0204; RST0435NGW0204; RST0720NGW0204; RST0725NGW0204; RST0730NGW0204; RST0735NGW0204; RST1020NGW0204; RST1025NGW0204; RST1030NGW0204; RST1035NGW0204; RST1520NGW0204; RST1525NGW0204; RST1530NGW0204; RST1535NGW0204; RST3020NGW0204; RST3025NGW0204; RST3030NGW0204; RST3035NGW0204; RST0420NGW0208; RST0425NGW0208; RST0430NGW0208; RST0435NGW0208; RST0720NGW0208; RST0725NGW0208; RST0730NGW0208; RST0735NGW0208; RST1020NGW0208; RST1025NGW0208;RST1030NGW0208; RST1035NGW0208; RST1520NGW0208; RST1525NGW0208; RST1530NGW0208; RST1535NGW0208; RST3020NGW0208; RST3025NGW0208; RST3030NGW0208; RST3035NGW0208; RST0420NGW0217; RST0425NGW0217; RST0430NGW0217; RST0435NGW0217;

RST0720NGW0217; RST0725NGW0217; RST0730NGW0217; RST0735NGW0217; RST1020NGW0217; RST1025NGW0217; RST1030NGW0217; RST1035NGW0217; RST1520NGW0217; RST1525NGW0217; RST1530NGW0217; RST1535NGW0217; RST3020NGW0217; RST3025NGW0217; RST3030NGW0217; RST3035NGW0217; RST0420NGW0218; RST0425NGW0218; RST0430NGW0218; RST0435NGW0218; RST0720NGW0218; RST0725NGW0218; RST0730NGW0218; RST0735NGW0218; RST1020NGW0218; RST1025NGW0218; RST1030NGW0218; RST1035NGW0218; RST1520NGW0218; RST1525NGW0218; RST1530NGW0218; RST1535NGW0218; RST3020NGW0218; RST3025NGW0218; RST3030NGW0218; RST3035NGW0218; RST0420NGW0220; RST0425NGW0220; RST0430NGW0220; RST0435NGW0220; RST0720NGW0220; RST0725NGW0220; RST0730NGW0220; RST0735NGW0220; RST1020NGW0220; RST1025NGW0220; RST1030NGW0220; RST1035NGW0220; RST1520NGW0220; RST1525NGW0220; RST1530NGW0220; RST1535NGW0220; RST3020NGW0220; RST3025NGW0220; RST3030NGW0220; RST3035NGW0220; RST0420NGW0221; RST0425NGW0221; RST0430NGW0221; RST0435NGW0221; RST0720NGW0221; RST0725NGW0221; RST0730NGW0221; RST0735NGW0221; RST1020NGW0221; RST1025NGW0221; RST1030NGW0221; RST1035NGW0221; RST1520NGW0221; RST1525NGW0221; RST1530NGW0221; RST1535NGW0221; RST3020NGW0221; RST3025NGW0221; RST3030NGW0221; RST3035NGW0221; RST0420NGW0228; RST0425NGW0228; RST0430NGW0228; RST0435NGW0228; RST0720NGW0228; RST0725NGW0228; RST0730NGW0228; RST0735NGW0228; RST1020NGW0228; RST1025NGW0228;RST1030NGW0228; RST1035NGW0228; RST1520NGW0228; RST1525NGW0228; RST1530NGW0228; RST1535NGW0228; RST3020NGW0228; RST3025NGW0228; RST3030NGW0228; RST3035NGW0228; RST0420NGW0232; RST0425NGW0232; RST0430NGW0232; RST0435NGW0232; RST0720NGW0232; RST0726NGW0232; RST0730NGW0232; RST0735NGW0232; RST1020NGW0232; RST1025NGW0232; RST1030NGW0232; RST1035NGW0232; RST1520NGW0232; RST1525NGW0232; RST1530NGW0232; RST1535NGW0232; RST3020NGW0232; RST3025NGW0232; RST3030NGW0232, RST3035NGW0232; RST0420NGW0241; RST0425NGW0241; RST0430NGW0241; RST0435NGW0241; RST0720NGW0241; RST0725NGW0241; RST0730NGW0241; RST0T3SNGW0241; RST1020NGW0241; RST1025NGW0241; RST1030NGW0241; RST1035NGW0241; RST1520NGW0241; RST1525NGW0241; RST1530NGW0241; RST1535NGW0241; RST3020NGW0241; RST3025NGW0241; RST3030NGW0241; RST3035NGW0241; RST0420NGW0242; RST0425NGW0242; RST0430NGW0242; RST0435NGW0242; RST0720NGW0242; RST0725NGW0242; RST0730NGW0242; RST0735NGW0242; RST1020NGW0242; RST1025NGW0242; RST1030NGW0242; RST1035NGW0242; RST1520NGW0242; RST1525NGW0242; RST1530NGW0242; RST1535NGW0242; RST3020NGW0242; RST3025NGW0242; RST3030NGW0242; RST3035NGW0242; RST0420NGW0244; RST0425NGW0244; RST0430NGW0244; RST0435NGW0244; RST0720NGW0244; RST0725NGW0244; RST0730NGW0244; RST0735NGW0244; RST1020NGW0244; RST1025NGW0244; RST1030NGW0244; RST1035NGW0244; RST1520NGW0244; RST1525NGW0244; RST1530NGWD244; RST1535NGW0244; RST3020NGW0244; RST3025NGW0244; RST3030NGW0244; RST3035NGW0244; RST0420NGW0245; RST0425NGW0245; RST0430NGW0245; RST0435NGW0245; RST0720NGW0245; RST0725NGW0245; RST0730NGW0245; RST0735NGW0245; RST1020NGW0245; RST1025NGW0245;RST1030NGW0245; RST1035NGW0245; RST1520NGW0245; RST1525NGW0245; RST1530NGW0245; RST1535NGW0245; RST3020NGW0245; RST3025NGW0245; RST3030NGW0245; RST3035NGW0245; RPD0420NGW0206; RPD0425NGW0206; RPD0430NGW0206; RPD0435NGW0206; RPD0720NGW0206; RPD0725NGW0206; RPD0730NGW0206; RPD0735NGW0206; RPD1020NGW0206; RPD1025NGW0206; RPD1030NGW0206; RPD1035NGW0206; RPD1520NGW0206; RPD1525NGW0206; RPD1530NGW0206; RPD1535NGW0206; RPD3020NGW0206; RPD3025NGW0206; RPD3030NGW0206; RPD3035NGW0206; RPD0420NGW0209; RPD0425NGW0209; RPD0430NGW0209; RPD0435NGW0209; RPD0720NGW0209; RPD0725NGW0209; RPD0730NGW0209; RPD0735NGW0209; RPD1020NGW0209; RPD1025NGW0209; RPD1030NGW0209; RPD1035NGW0209; RPD1520NGW0209; RPD1525NGW0209;

RPD1530NGW0209; RPD1535NGW0209; RPD3020NGW0209; RPD3025NGW0209; RPD3030NGW0209; RPD3035NGW0209; RPD0420NGW0230; RPD0425NGW0230; RPD0430NGW0230; RPD0435NGW0230; RPD0720NGW0230; RPD0725NGW0230; RPD0730NGW0230; RPD0735NGW0230; RPD1020NGW0230; RPD1025NGW0230; RPD1030NGW0230; RPD1035NGW0230; RPD1520NGW0230; RPD1525NGW0230; RPD1530NGW0230; RPD1535NGW0230; RPD3020NGW0230; RPD3025NGW0230; RPD3030NGW0230; RPD3035NGW0230; RPD0420NGW0233; RPD0425NGW0233; RPD0430NGW0233; RPD0435NGW0233; RPD0720NGW0233; RPD0725NGW0233; RPD0730NGW0233; RPD0735NGW0233; RPD1020NGW0233; RPD1025NGW0233; RPD1030NGW0233; RPD1035NGW0233; RPD1520NGW0233; RPD1525NGW0233; RPD1530NGW0233; RPD1535NGW0233; RPD3020NGW0233; RPD3025NGW0233; RPD3030NGW0233; RPD3035NGW0233; RPD0420NGW0204; RPD0425NGW0204; RPD0430NGW0204; RPD0435NGW0204; RPD0720NGW0204; RPD0725NGW0204; RPD0730NGW0204; RPD0735NGW0204; RPD1020NGW0204; RPD1025NGW0204;RPD1030NGW0204; RPD1035NGW0204; RPD1520NGW0204; RPD1525NGW0204; RPD1530NGW0204; RPD1535NGW0204; RPD3020NGW0204; RPD3025NGW0204; RPD3030NGW0204; RPD3035NGW0204; RPD0420NGW0208; RPD0425NGW0208; RPD0430NGW0208; RPD0435NGW0208; RPD0720NGW0208; RPD0725NGW0208; RPD0730NGW0208; RPD0735NGW0208; RPD1020NGW0208; RPD1025NGW0208; RPD1030NGW0208; RPD1035NGW0208; RPD1520NGW0208; RPD1525NGW0208; RPD1530NGW0208; RPD1535NGW0268; RPD3020NGW0208; RPD3025NGW0208; RPD3030NGW0208; RPD3035NGW0208; RPD0420NGW0217; RPD0425NGW0217; RPD0430NGW0217; RPD0435NGW0217; RPD0720NGW0217; RPD0725NGW0217; RPD0730NGW0217; RPD0735NGW0217; RPD1020NGW0217; RPD1025NGW0217; RPD1030NGW0217; RPD1035NGW0217; RPD1520NGW0217; RPD1525NGW0217; RPD1530NGW0217; RPD1535NGW0217; RPD3020NGW0217; RPD3025NGW0217; RPD3030NGW0217; RPD3035NGW0217; RPD0420NGW0218; RPD0425NGW0218; RPD0430NGW0218; RPD0435NGW0218; RPD0720NGW0218; RPD0725NGW0218; RPD0730NGW0218; RPD0735NGW0218; RPD1020NGW0218; RPD1025NGW0218; RPD1030NGW0218; RPD1035NGW0218; RPD1520NGW0218; RPD1525NGW0218; RPD1530NGW0218; RPD1535NGW0218; RPD3020NGW0218; RPD3025NGW0218; RPD3030NGW0218; RPD3035NGW0218; RPD0420NGW0220; RPD0425NGW0220; RPD0430NGW0220; RPD0435NGW0220; RPD0720NGW0220; RPD0725NGW0220; RPD0730NGW0220; RPD0735NGW0220; RPD1020NGW0220; RPD1025NGW0220; RPD1030NGW0220; RPD1035NGW0220; RPD1520NGW0220; RPD1525NGW0220; RPD1530NGW0220; RPD1535NGW0220; RPD3020NGW0220; RPD3025NGW0220; RPD3030NGW0220; RPD3035NGW0220; RPD0420NGW0221; RPD0425NGW0221; RPD0430NGW0221; RPD0435NGW0221; RPD0720NGW0221; RPD0725NGW0221; RPD0730NGW0221; RPD0735NGW0221; RPD1020NGW0221; RPD1025NGW0221;RPD1030NGW0221; RPD1035NGW0221; RPD1520NGW0221; RPD1525NGW0221; RPD1530NGW0221; RPD1535NGW0221; RPD3020NGW0221; RPD3025NGW0221; RPD3030NGW0221; RPD3035NGW0221; RPD0420NGW0228; RPD0425NGW0228; RPD0430NGW0228; RPD0435NGW0228; RPD0720NGW0228; RPD0725NGW0228; RPD0730NGW0228; RPD0735NGW0228; RPD1020NGW0228; RPD1025NGW0228; RPD1030NGW0228; RPD1035NGW0228; RPD1520NGW0228; RPD1525NGW0228; RPD1530NGW0228; RPD1535NGW0228; RPD3020NGW0228; RPD3025NGW0228; RPD3030NGW0228; RPD3035NGW0228; RPD0420NGW0232; RPD0425NGW0232; RPD0430NGW0232; RPD0435NGW0232; RPD0720NGW0232; RPD0725NGW0232; RPD0730NGW0232; RPD0735NGW0232; RPD1020NGW0232; RPD1025NGW0232; RPD1030NGW0232; RPD1035NGW0232; RPD1520NGW0232; RPD1525NGW0232; RPD1530NGW0232; RPD1535NGW0232; RPD3020NGW0232; RPD3025NGW0232; RPD3030NGW0232; RPD3035NGW0232; RPD0420NGW0241; RPD0425NGW0241; RPD0430NGW0241; RPD0435NGW0241; RPD0720NGW0241; RPD0725NGW0241; RPD0730NGW0241; RPD0735NGW0241; RPD1020NGW0241; RPD1025NGW0241; RPD1030NGW0241; RPD1035NGW0241; RPD1520NGW0241; RPD1525NGW0241; RPD1530NGW0241; RPD1535NGW0241; RPD3020NGW0241; RPD3025NGW0241; RPD3030NGW0241; RPD3035NGW0241; RPD0420NGW0242; RPD0425NGW0242; RPD0430NGW0242; RPD0435NGW0242;

RPD0720NGW0242; RPD0725NGW0242; RPD0730NGW0242; RPD0735NGW0242; RPD1020NGW0242; RPD1025NGW0242; RPD1030NGW0242; RPD1035NGW0242; RPD1520NGW0242; RPD1525NGW0242; RPD1530NGW0242; RPD1535NGW0242; RPD3020NGW0242; RPD3025NGW0242; RPD3030NGW0242; RPD3035NGW0242; RPD0420NGW0244; RPD0425NGW0244; RPD0430NGW0244; RPD0435NGW0244; RPD0720NGW0244; RPD0725NGW0244; RPD0730NGW0244; RPD0735NGW0244; RPD1020NGW0244; RPD1025NGW0244;RPD1030NGW0244; RPD1035NGW0244; RPD1520NGW0244; RPD1525NGW0244; RPD1530NGW0244; RPD1535NGW0244; RPD3020NGW0244; RPD3025NGW0244; RPD3030NGW0244; RPD3035NGW0244; RPD0420NGW0245; RPD0425NGW0245; RPD0430NGWE245; RPD0435NGW0245; RPD0720NGW0245; RPD0725NGW0245; RPD0730NGW0245; RPD0735NGW0245; RPD1020NGW0245; RPD1025NGW0245; RPD1030NGW0245; RPD1035NGW0245; RPD1520NGW0245; RPD1525NGW0245; RPD1530NGW0245; RPD1535NGW0245; RPD3020NGW0245; RPD3025NGW0245; RPD3030NGW0245; RPD3035NGW0245; RPT0420NGW0206; RPT0425NGW0206; RPT0430NGW0206; RPT0435NGW0206; RPT0720NGW0206; RPT0725NGW0206; RPT0730NGW0206; RPT0735NGW0206; RPT1020NGW0206; RPT1025NGW0206; RPT1030NGW0206; RPT1035NGW0206; RPT1520NGW0206; RPT1525NGW0206; RPT1530NGW0206; RPT1535NGW0206; RPT3020NGW0206; RPT3025NGW0206; RPT3030NGW0206; RPT3035NGW0206; RPT0420NGW0209; RPT0425NGW0209; RPT0430NGW0209; RPT0435NGW0209; RPT0720NGW0209; RPT0725NGW0209; RPT0730NGW0209; RPT0735NGW0209; RPT1020NGW0209; RPT1025NGW0209; RPT1030NGW0209; RPT1035NGW0209; RPT1520NGW0209; RPT1525NGW0209; RPT1530NGW0209; RPT1535NGW0209; RPT3020NGW0209; RPT3025NGW0209; RPT3030NGW0209; RPT3035NGW0209; RPT0420NGW0230; RPT0425NGW0230; RPT0430NGW0230; RPT0435NGW0230; RPT0720NGW0230; RPT0725NGW0230; RPT0730NGW0230; RPT0735NGW0230; RPT1020NGW0230; RPT1025NGW0230; RPT1030NGW0230; RPT1035NGW0230; RPT1520NGW0230; RPT1525NGW0230; RPT1530NGW0230; RPT1535NGW0230; RPT3020NGW0230; RPT3025NGW0230; RPT3030NGW0230; RPT3035NGW0230; RPT0420NGW0233; RPT0425NGW0233; RPT0430NGW0233; RPT0435NGW0233; RPT0720NGW0233; RPT0725NGW0233; RPT0730NGW0233; RPT0735NGW0233; RPT1020NGW0233; RPT1025NGW0233;RPT1030NGW0233; RPT1035NGW0233; RPT1520NGW0233; RPT1525NGW0233; RPT1530NGW0233; RPT1535NGW0233; RPT3020NGW0233; RPT3025NGW0233; RPT3030NGW0233; RPT3035NGW0233; RPT0420NGW0204; RPT0425NGW0204; RPT0430NGW0204; RPT0435NGW0204; RPT0720NGW0204; RPT0725NGW0204; RPT0730NGW0204; RPT0735NGW0204; RPT1020NGW0204; RPT1025NGW0204; RPT1030NGW0204; RPT1035NGW0204; RPT1520NGW0204; RPT1525NGW0204; RPT1530NGW0204; RPT1535NGW0204; RPT3020NGW0204; RPT3025NGW0204; RPT3030NGW0204; RPT3035NGW0204; RPT0420NGW0208; RPT0425NGW0208; RPT0430NGW0208; RPT0435NGW0208; RPT0720NGW0208; RPT0725NGW0208; RPT0730NGW0208; RPT0735NGW0208; RPT1020NGW0208; RPT1025NGW0208; RPT1030NGW0208; RPT1035NGW0208; RPT1520NGW0208; RPT1525NGW0208; RPT1530NGW0208; RPT1535NGW0208; RPT3020NGW0208; RPT3025NGW0208; RPT3030NGW0208; RPT3035NGW0208; RPT0420NGW0217; RPT0425NGW0217; RPT0430NGW0217; RPT0435NGW0217; RPT0720NGW0217; RPT0725NGW0217; RPT0730NGW0217; RPT0735NGW0217; RPT1020NGW0217; RPT1025NGW0217; RPT1030NGW0217; RPT1035NGW0217; RPT1520NGW0217; RPT1525NGW0217; RPT1530NGW0217; RPT1535NGW0217; RPT3020NGW0217; RPT3025NGW0217; RPT3030NGW0217; RPT3035NGW0217; RPT0420NGW0218; RPT0425NGW0218; RPT0430NGW0218; RPT0435NGW0218; RPT0720NGW0218; RPT0725NGW0218; RPT0730NGW0218; RPT0735NGW0218; RPT1020NGW0218; RPT1025NGW0218; RPT1030NGW0218; RPT1035NGW0218; RPT1520NGW0218; RPT1525NGW0218; RPT1530NGW0218; RPT1535NGW0218; RPT3020NGW0218; RPT3025NGW0218; RPT3030NGW0218; RPT3035NGW0218; RPT0420NGW0220; RPT0425NGW0220; RPT0430NGW0220; RPT0435NGW0220; RPT0720NGW0220; RPT0725NGW0220; RPT0730NGW0220; RPT0735NGW0220; RPT1020NGW0220; RPT1025NGW0220;RPT1030NGW0220; RPT1035NGW0220; RPT1520NGW0220; RPT1525NGW0220;

RPT1530NGW0220; RPT1535NGW0220; RPT3020NGW0220; RPT3025NGW0220; RPT3030NGW0220; RPT3035NGW0220; RPT0420NGW0221; RPT0425NGW0221; RPT0430NGW0221; RPT0435NGW0221; RPT0720NGW0221; RPT0725NGW0221; RPT0730NGW0221; RPT0735NGW0221; RPT1020NGW0221; RPT1025NGW0221; RPT1030NGW0221; RPT1035NGW0221; RPT1520NGW0221; RPT1525NGW0221; RPT1530NGW0221; RPT1535NGW0221; RPT3020NGW0221; RPT3025NGW0221; RPT3030NGW0221; RPT3035NGW0221; RPT0420NGW0228; RPT0425NGW0228; RPT0430NGW0228; RPT0435NG!N0228; RPT0720NGW0228; RPT0725NGW0228; RPT0730NGW0228; RPT0735NGW0228; RPT1020NGW0228; RPT1025NGW0228; RPT1030NGW0228; RPT1035NGW0228; RPT1520NGW0228; RPT1525NGW0228; RPT1530NGW0228; RPT1535NGW0228; RPT3020NGW0228; RPT3025NGW0228; RPT3030NGW0228; RPT3035NGW0228; RPT0420NGW0232; RPT0425NGW0232; RPT0430NGW0232; RPT0435NGW0232; RPT0720NGW0232; RPT0725NGW0232; RPT0730NGW0232; RPT0735NGW0232; RPT1020NGW0232; RPT1025NGW0232; RPT1030NGW0232; RPT1035NGW0232; RPT1520NGW0232; RPT1525NGW0232; RPT1530NGW0232; RPT1535NGW0232; RPT3020NGW0232; RPT3025NGW0232; RPT3030NGW0232; RPT3035NGW0232; RPT0420NGW0241; RPT0425NGW0241; RPT0430NGW0241; RPT0435NGW0241; RPT0720NGW0241; RPT0725NGW0241; RPT0730NGW0241; RPT0735NGW0241; RPT1020NGW0241; RPT1025NGW0241; RPT1030NGW0241; RPT1035NGW0241; RPT1520NGW0241; RPT1525NGW0241; RPT1530NGW0241; RPT1535NGW0241; RPT3020NGW0241; RPT3025NGW0241; RPT3030NGW0241; RPT3035NGW0241; RPT0420NGW0242; RPT0425NGW0242; RPT0430NGW0242; RPT0435NGW0242; RPT0720NGW0242; RPT0725NGW0242; RPT0730NGW0242; RPT0735NGW0242; RPT1020NGW0242; RPT1025NGW0242;RPT1030NGW0242; RPT1035NGW0242; RPT1520NGW0242; RPT1525NGW0242; RPT1530NGW0242; RPT1535NGW0242; RPT3020NGW0242; RPT3025NGW0242; RPT3030NGW0242; RPT3035NGW0242; RPT0420NGW0244; RPT0425NGW0244; RPT0430NGW0244; RPT0435NGW0244; RPT0720NGW0244; RPT0725NGW0244; RPT0730NGW0244; RPT0735NGW0244; RPT1020NGW0244; RPT1025NGW0244; RPT1030NGW0244; RPT1035NGW0244; RPT1520NGW0244; RPT1525NGW0244; RPT1530NGW0244; RPT1535NGW0244; RPT3020NGW0244; RPT3025NGW0244; RPT3030NGW0244; RPT3035NGW0244; RPT0420NGW0245; RPT0425NGW0245; RPT0430NGW0245; RPT0435NGW0245; RPT0720NGW0245; RPT0725NGW0245; RPT0730NGW0245; RPT0735NGW0245; RPT1020NGW0245; RPT1025NGW0245; RPT1030NGW0245; RPT1035NGW0245; RPT1520NGW0245; RPT1525NGW0245; RPT1530NGW0245; RPT1535NGW0245; RPT3020NGW0245; RPT3025NGW0245; RPT3030NGW0245; RPT3035NGW0245; RSD0420RGW0206; RSD0425RGW0206; RSD0430RGW0206; RSD0435RGW0206; RSD0720RGW0206; RSD0725RGW0206; RSD0730RGW0206; RSD0735RGW0206; RSD1020RGW0206; RSD1025RGW0206; RSD1030RGW0206; RSD1035RGW0206; RSD1520RGW0206; RSD1525RGW0206; RSD1530RGW0206; RSD1535RGW0206; RSD3020RGW0206; RSD3025RGW0206; RSD3030RGW0206; RSD3035RGW0206; RSD0420RGW0209; RSD0425RGW0209; RSD0430RGW0209; RSD0435RGW0209; RSD0720RGW0209; RSD0725RGW0209; RSD0730RGW0209; RSD0735RGW0209; RSD1020RGW0209; RSD1025RGW0209; RSD1030RGW0209; RSD1035RGW0209; RSD1520RGW0209; RSD1525RGW0209; RSD1530RGW0209; RSD1535RGW0209; RSD3020RGW0209; RSD3025RGW0209; RSD3030RGW0209; RSD3035RGW0209; RSD0420RGW0230; RSD0425RGW0230; RSD0430RGW0230; RSD0435RGW0230; RSD0720RGW0230; RSD0725RGW0230; RSD0730RGW0230; RSD0735RGW0230; RSD1020RGW0230; RSD1025RGW0230;RSD1030RGW0230; RSD1035RGW0230; RSD1520RGW0230; RSD1525RGW0230; RSD1530RGW0230; RSD1535RGW0230; RSD3020RGW0230; RSD3025RGW0230; RSD3030RGW0230; RSD3035RGW0230; RSD0420RGW0233; RSD0425RGW0233; RSD0430RGW0233; RSD0435RGW0233; RSD0720RGW0233; RSD0725RGW0233; RSD0730RGW0233; RSD0735RGW0233; RSD1020RGW0233; RSD1025RGW0233; RSD1030RGW0233; RSD1035RGW0233; RSD1520RGW0233; RSD1525RGW0233; RSD1530RGW0233; RSD1535RGW0233; RSD3020RGW0233; RSD3025RGW0233; RSD3030RGW0233; RSD3035RGW0233; RSD0420RGW0204; RSD0425RGW0204; RSD0430RGW0204; RSD0435RGW0204;

RSD0720RGW0204; RSD0725RGW0204; RSD0730RGW0204; RSD0735RGW0204; RSD1020RGW0204; RSD1025RGW0204; RSD1030RGW0204; RSD1035RGW0204; RSD1520RGW0204; RSD1525RGW0204; RSD1530RGW0204; RSD1535RGW0204; RSD3020RGW0204; RSD3025RGW0204; RSD3030RGW0204; RSD3035RGW0204; RSD0420RGW0208; RSD0425RGW0208; RSD0430RGW0208; RSD0435RGW0208; RSD0720RGW0208; RSD0725RGW0208; RSD0730RGW0208; RSD0735RGW0208; RSD1020RGW0208; RSD1025RGW0208; RSD1030RGW0208; RSD1035RGW0208; RSD1520RGW0208; RSD1525RGW0208; RSD1530RGW0208; RSD1535RGW0208; RSD3020RGW0208; RSD3025RGW0208; RSD3030RGW0208; RSD3035RGW0208; RSD0420RGW0217; RSD0425RGW0217; RSD0430RGW0217; RSD0435RGW0217; RSD0720RGW0217; RSD0725RGW0217; RSD0730RGW0217; RSD0735RGW0217; RSD1020RGW0217; RSD1025RGW0217; RSD1030RGW0217; RSD1035RGW0217; RSD1520RGW0217; RSD1525RGW0217; RSD1530RGW0217; RSD1535RGW0217; RSD3020RGW0217; RSD3025RGW0217; RSD3030RGW0217; RSD3035RGW0217; RSD0420RGW0218; RSD0425RGW0218; RSD0430RGW0218; RSD0435RGW0218; RSD0720RGW0218; RSD0725RGW0218; RSD0730RGW0218; RSD0735RGW0218; RSD1020RGW0218; RSD1025RGW0218;RSD1030RGW0218; RSD1035RGW0218; RSD1520RGW0218; RSD1525RGW0218; RSD1530RGW0218; RSD1535RGW0218; RSD3020RGW0218; RSD3025RGW0218; RSD3030RGW0218; RSD3035RGW0218; RSD0420RGW0220; RSD0425RGW0220; RSD0430RGW0220; RSD0435RGW0220; RSD0720RGW0220; RSD0725RGW0220; RSD0730RGW0220; RSD0735RGW0220; RSD1020RGW0220; RSD1025RGW0220; RSD1030RGW0220; RSD1035RGW0220; RSD1520RGW0220; RSD1525RGW0220; RSD1530RGW0220; RSD1535RGW0220; RSD3020RGW0220; RSD3025RGW0220; RSD3030RGW0220; RSD3035RGW0220; RSD0420RGW0221; RSD0425RGW0221; RSD0430RGW0221; RSD0435RGW0221; RSD0720RGW0221; RSD0725RGW0221; RSD0730RGW0221; RSD0735RGW0221; RSD1020RGW0221; RSD1025RGW0221; RSD1030RGW0221; RSD1035RGW0221; RSD1520RGW0221; RSD1525RGW0221; RSD1530RGW0221; RSD1535RGW0221; RSD3020RGW0221; RSD3025RGW0221; RSD3030RGW0221; RSD3035RGW0221; RSD0420RGW0228; RSD0425RGW0228; RSD0430RGW0228; RSD0435RGW0228; RSD0720RGW0228; RSD0725RGW0228; RSD0730RGW0228; RSD0735RGW0228; RSD1020RGW0228; RSD1025RGW0228; RSD1030RGW0228; RSD1035RGW0228; RSD1520RGW0228; RSD1525RGW0228; RSD1530RGW0228; RSD1535RGW0228; RSD3020RGW0228; RSD3025RGW0228; RSD3030RGW0228; RSD3035RGW0228; RSD0420RGW0232; RSD0425RGW0232; RSD0430RGW0232; RSD0435RGW0232; RSD0720RGW0232; RSD0725RGW0232; RSD0730RGW0232; RSD0735RGW0232; RSD1020RGW0232; RSD1025RGW0232; RSD1030RGW0232; RSD1035RGW0232; RSD1520RGW0232; RSD1525RGW0232; RSD1530RGW0232; RSD1535RGW0232; RSD3020RGW0232; RSD3025RGW0232; RSD3030RGW0232; RSD3035RGW0232; RSD0420RGW0241; RSD0425RGW0241; RSD0430RGW0241; RSD0435RGW0241; RSD0720RGW0241; RSD0725RGW0241; RSD0730RGW0241; RSD0735RGW0241; RSD1020RGW0241; RSD1025RGW0241;RSD1030RGW0241; RSD1035RGW0241; RSD1520RGW0241; RSD1525RGW0241; RSD1530RGW0241; RSD1535RGW0241; RSD3020RGW0241; RSD3025RGW0241; RSD3030RGW0241; RSD3035RGW0241; RSD0420RGW0242; RSD0425RGW0242; RSD0430RGW0242; RSD0435RGW0242; RSD0720RGW0242; RSD0725RGW0242; RSD0730RGW0242; RSD0735RGW0242; RSD1020RGW0242; RSD1025RGW0242; RSD1030RGW0242; RSD1035RGW0242; RSD1520RGW0242; RSD1525RGW0242; RSD1530RGW0242; RSD1535RGW0242; RSD3020RGW0242; RSD3025RGW0242; RSD3030RGW0242; RSD3035RGW0242; RSD0420RGW0244; RSD0425RGW0244; RSD0430RGW0244; RSD0435RGW0244; RSD0720RGW0244; RSD0725RGW0244; RSD0730RGW0244; RSD0735RGW0244; RSD1020RGW0244; RSD1025RGW0244; RSD1030RGW0244; RSD1035RGW0244; RSD1520RGW0244; RSD1525RGW0244; RSD1530RGW0244; RSD1535RGW0244; RSD3020RGW0244; RSD3025RGW0244; RSD3030RGW0244; RSD3035RGW0244; RSD0420RGW0245; RSD0425RGW0245; RSD0430RGW0245; RSD0435RGW0245; RSD0720RGW0245; RSD0725RGW0245; RSD0730RGW0245; RSD0735RGW0245; RSD1020RGW0245; RSD1025RGW0245; RSD1030RGW0245; RSD1035RGW0245; RSD1520RGW0245; RSD1525RGW0245;

RSD1530RGW0245; RSD1535RGW0245; RSD3020RGW0245; RSD3025RGW0245; RSD3030RGW0245; RSD3035RGW0245; RPD0420RGW0206; RPD0425RGW0206; RPD0430RGW0206; RPD0435RGW0206; RPD0720RGW0206; RPD0725RGW0206; RPD0730RGW0206; RPD0735RGW0206; RPD1020RGW0206; RPD1025RGW0206; RPD1030RGW0206; RPD1035RGW0206; RPD1520RGW0206; RPD1525RGW0206; RPD1530RGW0206; RPD1535RGW0206; RPD3020RGW0206; RPD3025RGW0206; RPD3030RGW0206; RPD3035RGW0206; RPD0420RGW0209; RPD0425RGW0209; RPD0430RGW0209; RPD0435RGW0209; RPD0720RGW0209; RPD0725RGW0209; RPD0730RGW0209; RPD0735RGW0209; RPD1020RGW0209; RPD1025RGW0209;RPD1030RGW0209; RPD1035RGW0209; RPD1520RGW0209; RPD1525RGW0209; RPD1530RGW0209; RPD1535RGW0209; RPD3020RGW0209; RPD3025RGW0209; RPD3030RGW0209; RPD3035RGW0209; RPD0420RGW0230; RPD0425RGW0230; RPD0430RGW0230; RPD0435RGW0230; RPD0720RGW0230; RPD0725RGW0230; RPD0730RGW0230; RPD0735RGW0230; RPD1020RGW0230; RPD1025RGW0230; RPD1030RGW0230; RPD1035RGW0230; RPD1520RGW0230; RPD1525RGW0230; RPD1530RGW0230; RPD1535RGW0230; RPD3020RGW0230; RPD3025RGW0230; RPD3030RGW0230; RPD3035RGW0230; RPD0420RGW0233; RPD0425RGW0233; RPD0430RGW0233; RPD0435RGW0233; RPD0720RGW0233; RPD0725RGW0233; RPD0730RGW0233; RPD0735RGW0233; RPD1020RGW0233; RPD1025RGW0233; RPD1030RGW0233; RPD1035RGW0233; RPD1520RGW0233; RPD1525RGW0233; RPD1530RGW0233; RPD1535RGW0233; RPD3020RGW0233; RPD3025RGW0233; RPD3030RGW0233; RPD3035RGW0233; RPD0420RGW0204; RPD0425RGW0204; RPD0430RGW0204; RPD0435RGW0204; RPD0720RGW0204; RPD0725RGW0204; RPD0730RGW0204; RPD0735RGW0204; RPD1020RGW0204; RPD1025RGW0204; RPD1030RGW0204; RPD1035RGW0204; RPD1520RGW0204; RPD1525RGW0204; RPD1530RGW0204; RPD1535RGW0204; RPD3020RGW0204; RPD3025RGW0204; RPD3030RGW0204; RPD3035RGW0204; RPD0420RGW0208; RPD0425RGW0208; RPD0430RGW0208; RPD0435RGW0208; RPD0720RGW0208; RPD0725RGW0208; RPD0730RGW0208; RPD0735RGW0208; RPD1020RGW0208; RPD1025RGW0208; RPD1030RGW0208; RPD1035RGW0208; RPD1520RGW0208; RPD1525RGW0208; RPD1530RGW0208; RPD1535RGW0208; RPD3020RGW0208; RPD3025RGW0208; RPD3030RGW0208; RPD3035RGW0208; RPD0420RGW0217; RPD0425RGW0217; RPD0430RGW0217; RPD0435RGW0217; RPD0720RGW0217; RPD0725RGW0217; RPD0730RGW0217; RPD0735RGW0217; RPD1020RGW0217; RPD1025RGW0217;RPD1030RGW0217; RPD1035RGW0217; RPD1520RGW0217; RPD1525RGW0217; RPD1530RGW0217; RPD1535RGW0217; RPD3020RGW0217; RPD3025RGW0217; RPD3030RGW0217; RPD3035RGW0217; RPD0420RGW0218; RPD0425RGW0218; RPD0430RGW0218; RPD0435RGW0218; RPD0720RGW0218; RPD0725RGW0218; RPD0730RGW0218; RPD0735RGW0218; RPD1020RGW0218; RPD1025RGW0218; RPD1030RGW0218; RPD1035RGW0218; RPD1520RGW0218; RPD1525RGW0218; RPD1530RGW0218; RPD1535RGW0218; RPD3020RGW0218; RPD3025RGW0218; RPD3030RGW0218; RPD3035RGW0218; RPD0420RGW0220; RPD0425RGW0220; RPD0430RGW0220; RPD0435RGW0220; RPD0720RGW0220; RPD0725RGW0220; RPD0730RGW0220; RPD0735RGW0220; RPD1020RGW0220; RPD1025RGW0220; RPD1030RGW0220; RPD1035RGW0220; RPD1520RGW0220; RPD1525RGW0220; RPD1530RGW0220; RPD1535RGW0220; RPD3020RGW0220; RPD3025RGW0220; RPD3030RGW0220; RPD3035RGW0220; RPD0420RGW0221; RPD0425RGW0221; RPD0430RGW0221; RPD0435RGW0221; RPD0720RGW0221; RPD0725RGW0221; RPD0730RGW0221; RPD0735RGW0221; RPD1020RGW0221; RPD1025RGW0221; RPD1030RGW0221; RPD1035RGW0221; RPD1520RGW0221; RPD1525RGW0221; RPD1530RGW0221; RPD1535RGW0221; RPD3020RGW0221; RPD3025RGW0221; RPD3030RGW0221; RPD3035RGW0221; RPD0420RGW0228; RPD0425RGW0228; RPD0430RGW0228; RPD0435RGW0228; RPD0720RGW0228; RPD0725RGW0228; RPD0730RGW0228; RPD0735RGW0228; RPD1020RGW0228; RPD1025RGW0228; RPD1030RGW0228; RPD1035RGW0228; RPD1520RGW0228; RPD1525RGW0228; RPD1530RGW0228; RPD1535RGW0228; RPD3020RGW0228; RPD3025RGW0228; RPD3030RGW0228; RPD3035RGW0228; RPD0420RGW0232; RPD0425RGW0232; RPD0430RGW0232; RPD0435RGW0232;

RPD0720RGW0232; RPD0725RGW0232; RPD0730RGW0232; RPD0735RGW0232; RPD1020RGW0232; RPD1025RGW0232;RPD1030RGW0232; RPD1035RGW0232; RPD1520RGW0232; RPD1525RGW0232; RPD1530RGW0232; RPD1535RGW0232; RPD3020RGW0232; RPD3025RGW0232; RPD3030RGW0232; RPD3035RGW0232; RPD0420RGW0241; RPD0425RGW0241; RPD0430RGW0241; RPD0435RGW0241; RPD0720RGW0241; RPD0725RGW0241; RPD0730RGW0241; RPD0735RGW0241; RPD1020RGW0241; RPD1025RGW0241; RPD1030RGW0241; RPD1035RGW0241; RPD1520RGW0241; RPD1525RGW0241; RPD1530RGW0241; RPD1535RGW0241; RPD3020RGW0241; RPD3025RGW0241; RPD3030RGW0241; RPD3035RGW0241; RPD0420RGW0242; RPD0425RGW0242; RPD0430RGW0242; RPD0435RGW0242; RPD0720RGW0242; RPD0725RGW0242; RPD0730RGW0242; RPD0735RGW0242; RPD1020RGW0242; RPD1025RGW0242; RPD1030RGW0242; RPD1035RGW0242; RPD1520RGW0242; RPD1525RGW0242; RPD1530RGW0242; RPD1535RGW0242; RPD3020RGW0242; RPD3025RGW0242; RPD3030RGW0242; RPD3035RGW0242; RPD0420RGW0244; RPD0425RGW0244; RPD0430RGW0244; RPD0435RGW0244; RPD0720RGW0244; RPD0725RGW0244; RPD0730RGW0244; RPD0735RGW0244; RPD1020RGW0244; RPD1025RGW0244; RPD1030RGW0244; RPD1035RGW0244; RPD1520RGW0244; RPD1525RGW0244; RPD1530RGW0244; RPD1535RGW0244; RPD3020RGW0244; RPD3025RGW0244; RPD3030RGW0244; RPD3035RGW0244; RPD0420RGW0245; RPD0425RGW0245; RPD0430RGW0245; RPD0435RGW0245; RPD0720RGW0245; RPD0725RGW0245; RPD0730RGW0245; RPD0735RGW0245; RPD1020RGW0245; RPD1025RGW0245; RPD1030RGW0245; RPD1035RGW0245; RPD1520RGW0245; RPD1525RGW0245; RPD1530RGW0245; RPD1535RGW0245; RPD3020RGW0245; RPD3025RGW0245; RPD3030RGW0245; RPD3035RGW0245; RPT0420RGW0206; RPT0425RGW0206; RPT0430RGW0206; RPT0435RGW0206; RPT0720RGW0206; RPT0725RGW0206; RPT0730RGW0206; RPT0735RGW0206; RPT1020RGW0206; RPT1025RGW0206;RPT1030RGW0206; RPT1035RGW0206; RPT1520RGW0206; RPT1525RGW0206; RPT1530RGW0206; RPT1535RGW0206; RPT3020RGW0206; RPT3025RGW0206; RPT3030RGW0206; RPT3035RGW0206; RPT0420RGW0209; RPT0425RGW0209; RPT0430RGW0209; RPT0435RGW0209; RPT0720RGW0209; RPT0725RGW0209; RPT0730RGW0209; RPT0735RGW0209; RPT1020RGW0209; RPT1025RGW0209; RPT1030RGW0209; RPT1035RGW0209; RPT1520RGW0209; RPT1525RGW0209; RPT1530RGW0209; RPT1535RGW0209; RPT3020RGW0209; RPT3025RGW0209; RPT3030RGW0209; RPT3035RGW0209; RPT0420RGW0230; RPT0425RGW0230; RPT0430RGW0230; RPT0435RGW0230; RPT0720RGW0230; RPT0725RGW0230; RPT0730RGW0230; RPT0735RGW0230; RPT1020RGW0230; RPT1025RGW0230; RPT1030RGW0230; RPT1035RGW0230; RPT1520RGW0230; RPT1525RGW0230; RPT1530RGW0230; RPT1535RGW0230; RPT3020RGW0230; RPT3025RGW0230; RPT3030RGW0230; RPT3035RGW0230; RPT0420RGW0233; RPT0425RGW0233; RPT0430RGW0233; RPT0435RGW0233; RPT0720RGW0233; RPT0725RGW0233; RPT0730RGW0233; RPT0735RGW0233; RPT1020RGW0233; RPT1025RGW0233; RPT1030RGW0233; RPT1035RGW0233; RPT1520RGW0233; RPT1525RGW0233; RPT1530RGW0233; RPT1535RGW0233; RPT3020RGW0233; RPT3025RGW0233; RPT3030RGW0233; RPT3035RGW0233; RPT0420RGW0204; RPT0425RGW0204; RPT0430RGW0204; RPT0435RGW0204; RPT0720RGW0204; RPT0725RGW0204; RPT0730RGW0204; RPT0735RGW0204; RPT1020RGW0204; RPT1025RGW0204; RPT1030RGW0204; RPT1035RGW0204; RPT1520RGW0204; RPT1525RGW0204; RPT1530RGW0204; RPT1535RGW0204; RPT3020RGW0204; RPT3025RGW0204; RPT3030RGW0204; RPT3035RGW0204; RPT0420RGW0208; RPT0425RGW0208; RPT0430RGW0208; RPT0435RGW0208; RPT0720RGW0208; RPT0725RGW0208; RPT0730RGW0208; RPT0735RGW0208; RPT1020RGW0208; RPT1025RGW0208;RPT1030RGW0208; RPT1035RGW0208; RPT1520RGW0208; RPT1525RGW0208; RPT1530RGW0208; RPT1535RGW0208; RPT3020RGW0208; RPT3025RGW0208; RPT3030RGW0208; RPT3035RGW0208; RPT0420RGW0217; RPT0425RGW0217; RPT0430RGW0217; RPT0435RGW0217; RPT0720RGW0217; RPT0725RGW0217; RPT0730RGW0217; RPT0735RGW0217; RPT1020RGW0217; RPT1025RGW0217; RPT1030RGW0217; RPT1035RGW0217; RPT1520RGW0217; RPT1525RGW0217;

RPT1530RGW0217; RPT1535RGW0217; RPT3020RGW0217; RPT3025RGW0217; RPT3030RGW0217; RPT3035RGW0217; RPT0420RGW0218; RPT0425RGW0218; RPT0430RGW0218; RPT0435RGW0218; RPT0720RGW0218; RPT0725RGW0218; RPT0730RGW0218; RPT0735RGW0218; RPT1020RGW0218; RPT1025RGW0218; RPT1030RGW0218; RPT1035RGW0218; RPT1520RGW0218; RPT1525RGW0218; RPT1530RGW0218; RPT1535RGW0218; RPT3020RGW0218; RPT3025RGW0218; RPT3030RGW0218; RPT3035RGW0218; RPT0420RGW0220; RPT0425RGW0220; RPT0430RGW0220; RPT0435RGW0220; RPT0720RGW0220; RPT0725RGW0220; RPT0730RGW0220; RPT0735RGW0220; RPT1020RGW0220; RPT1025RGW0220; RPT1030RGW0220; RPT1035RGW0220; RPT1520RGW0220; RPT1525RGW0220; RPT1530RGW0220; RPT1535RGW0220; RPT3020RGW0220; RPT3025RGW0220; RPT3030RGW0220; RPT3035RGW0220; RPT0420RGW0221; RPT0425RGW0221; RPT0430RGW0221; RPT0435RGW0221; RPT0720RGW0221; RPT0725RGW0221; RPT0730RGW0221; RPT0735RGW0221; RPT1020RGW0221; RPT1025RGW0221; RPT1030RGW0221; RPT1035RGW0221; RPT1520RGW0221; RPT1525RGW0221; RPT1530RGW0221; RPT1535RGW0221; RPT3020RGW0221; RPT3025RGW0221; RPT3030RGW0221; RPT3035RGW0221; RPT0420RGW0228; RPT0425RGW0228; RPT0430RGW0228; RPT0435RGW0228; RPT0720RGW0228; RPT0725RGW0228; RPT0730RGW0228; RPT0735RGW0228; RPT1020RGW0228; RPT1025RGW0228;RPT1030RGW0228; RPT1035RGW0228; RPT1520RGW0228; RPT1525RGW0228; RPT1530RGW0228; RPT1535RGW0228; RPT3020RGW0228; RPT3025RGW0228; RPT3030RGW0228; RPT3035RGW0228; RPT0420RGW0232; RPT0425RGW0232; RPT0430RGW0232; RPT0435RGW0232; RPT0720RGW0232; RPT0725RGW0232; RPT0730RGW0232; RPT0735RGW0232; RPT1020RGW0232; RPT1025RGW0232; RPT1030RGW0232; RPT1035RGW0232; RPT1520RGW0232; RPT1525RGW0232; RPT1530RGW0232; RPT1535RGW0232; RPT3020RGW0232; RPT3025RGW0232; RPT3030RGW0232; RPT3035RGW0232; RPT0420RGW0241; RPT0425RGW0241; RPT0430RGW0241; RPT0435RGW0241; RPT0720RGW0241; RPT0725RGW0241; RPT0730RGW0241; RPT0735RGW0241; RPT1020RGW0241; RPT1025RGW0241; RPT1030RGW0241; RPT1035RGW0241; RPT1520RGW0241; RPT1525RGW0241; RPT1530RGW0241; RPT1535RGW0241; RPT3020RGW0241; RPT3025RGW0241; RPT3030RGW0241; RPT3035RGW0241; RPT0420RGW0242; RPT0425RGW0242; RPT0430RGW0242; RPT0435RGW0242; RPT0720RGW0242; RPT0725RGW0242; RPT0730RGW0242; RPT0735RGW0242; RPT1020RGW0242; RPT1025RGW0242; RPT1030RGW0242; RPT1035RGW0242; RPT1520RGW0242; RPT1525RGW0242; RPT1530RGW0242; RPT1535RGW0242; RPT3020RGW0242; RPT3025RGW0242; RPT3030RGW0242; RPT3035RGW0242; RPT0420RGW0244; RPT0425RGW0244; RPT0430RGW0244; RPT0435RGW0244; RPT0720RGW0244; RPT0725RGW0244; RPT0730RGW0244; RPT0735RGW0244; RPT1020RGW0244; RPT1025RGW0244; RPT1030RGW0244; RPT1035RGW0244; RPT1520RGW0244; RPT1525RGW0244; RPT1530RGW0244; RPT1535RGW0244; RPT3020RGW0244; RPT3025RGW0244; RPT3030RGW0244; RPT3035RGW0244; RPT0420RGW0245; RPT0425RGW0245; RPT0430RGW0245; RPT0435RGW0245; RPT0720RGW0245; RPT0725RGW0245; RPT0730RGW0245; RPT0735RGW0245; RPT1020RGW0245; RPT1025RGW0245;RPT1030RGW0245; RPT1035RGW0245; RPT1520RGW0245; RPT1525RGW0245; RPT1530RGW0245; RPT1535RGW0245; RPT3020RGW0245; RPT3025RGW0245; RPT3030RGW0245; RPT3035RGW0245; SD0420R; SD0425R; SD0430R; SD0435R; SD0720R; SD0725R; SD0730R; SD0735R; SD1020R; SD1025R; SD1030R; SD1035R; SD1520R; SD1525R; SD1530R; SD1535R; SD3020R; SD3025R; SD3030R;SD3035R; SD0420RGW0206; SD0425RGW0206; SD0430RGW0206; SD0435RGW0206; SD0720RGW0206; SD0725RGW0206; SD0730RGW0206; SD0735RGW0206; SD1020RGW0206; SD1025RGW0206; SD1030RGW0206; SD1035RGW0206; SD1520RGW0206; SD1525RGW0206; SD1530RGW0206; SD1535RGW0206; SD3020RGW0206; SD3025RGW0206; SD3030RGW0206; SD3035RGW0206; SD0420RGW0209; SD0425RGW0209; SD0430RGW0209; SD0435RGW0209; SD0720RGW0209; SD0725RGW0209; SD0730RGW0209; SD0735RGW0209; SD1020RGW0209; SD1025RGW0209; SD1030RGW0209; SD1035RGW0209; SD1520RGW0209; SD1525RGW0209;

SD1530RGW0209; SD1535RGW0209; SD3020RGW0209; SD3025RGW0209; SD3030RGW0209;
SD3035RGW0209; SD0420RGW0204; SD0425RGW0204; SD0430RGW0204; SD0435RGW0204;
SD0720RGW0204; SD0725RGW0204; SD0730RGW0204; SD0735RGW0204; SD1020RGW0204;
SD1025RGW0204; SD1030RGW0204; SD1035RGW0204; SD1520RGW0204; SD1525RGW0204;
SD1530RGW0204; SD1535RGW0204; SD3020RGW0204; SD3025RGW0204; SD3030RGW0204;
SD3035RGW0204; SD0420RGW0208; SD0425RGW0208; SD0430RGW0208; SD0435RGW0208;
SD0720RGW0208; SD0720RGW0208; SD0730RGW0208; SD0735RGW0208; SD1020RGW0208;
SD1025RGW0208; SD1030RGW0208; SD1035RGW0208; SD1520RGW0208; SD1525RGW0208;
SD1530RGW0208; SD1535RGW0208; SD3020RGW0208; SD3025RGW0208; SD3030RGW0208;
SD3035RGW0208; SD0420RGW0217; SD0425RGW0217; SD0430RGW0217; SD0435RGW0217;
SD0720RGW0217; SD0725RGW0217; SD0730RGW0217; SD0735RGW0217; SD1020RGW0217;
SD1025RGW0217; SD1030RGW0217; SD1035RGW0217; SD1520RGW0217; SD1525RGW0217;
SD1530RGW0217; SD1535RGW0217; SD3020RGW0217; SD3025RGW0217; SD3030RGW0217;
SD3035RGW0217; SD0420RGW0218; SD0425RGW0218; SD0430RGW0218; SD0435RGW0218;
SD0720RGW0218; SD0725RGW0218; SD0730RGW0218; SD0735RGW0218; SD1020RGW0218;
SD1025RGW0218; SD1030RGW0218; SD1035RGW0218; SD1520RGW0218; SD1525RGW0218;
SD1530RGW0218; SD1535RGW0218; SD3020RGW0218; SD3025RGW0218; SD3030RGW0218;
SD3035RGW0218; SD0420RGW0220; SD0425RGW0220; SD0430RGW0220;SD0435RGW0220;
SD0720RGW0220; SD0725RGW0220; SD0730RGW0220; SD0735RGW0220; SD1020RGW0220;
SD1025RGW0220; SD1030RGW0220; SD1035RGW0220; SD1520RGW0220; SD1525RGW0220;
SD1530RGW0220; SD1535RGW0220; SD3020RGW0220; SD3025RGW0220; SD3030RGW0220;
SD3035RGW0220; SD0420RGW0221; SD0425RGW0221; SD0430RGW0221; SD0435RGW0221;
SD0720RGW0221; SD0725RGW0221; SD0730RGW0221; SD073SRGW0221; SD1020RGW0221;
SD1025RGW0221; SD1030RGW0221; SD1035RGW0221; SD1520RGW0221; SD1525RGW0221;
SD1530RGW0221; SD1535RGW0221; SD3020RGW0221; SD3025RGW0221; SD3030RGW0221;
SD3035RGW0221; SD0420RGW0228; SD0425RGW0228; SD0430RGW0228; SD0435RGW0228;
SD0720RGW0228; SD0725RGW0228; SD0730RGW0228; SD0735RGW0228; SD1020RGW0228;
SD1025RGW0228; SD1030RGW0228; SD1035RGW0228; SD1520RGW0228; SD1525RGW0228;
SD1530RGW0228; SD1535RGW0228; SD3020RGW0228; SD3025RGW0228; SD3030RGW0228;
SD3035RGW0228; SD0420RGW0230; SD0425RGW0230; SD0430RGW0230; SD0435RGW0230;
SD0720RGW0230; SD0725RGW0230; SD0730RGW0230; SD0735RGW0230; SD1020RGW0230;
SD1025RGW0230; SD1030RGW0230; SD1035RGW0230; SD1520RGW0230; SD1525RGW0230;
SD1530RGW0230; SD1535RGW0230; SD3020RGW0230; SD3025RGW0230; SD3030RGW0230;
SD3035RGW0230; SD0420RGW0232; SD0425RGW0232; SD0430RGW0232; SD0435RGW0232;
SD0720RGW0232; SD0725RGW0232; SD0730RGW0232; SD0735RGW0232; SD1020RGW0232;
SD1025RGW0232; SD1030RGW0232; SD1035RGWE232; SD1520RGW0232; SD1525RGW0232;
SD1530RGW0232; SD1535RGW0232; SD3020RGW0232; SD3025RGW0232; SD3030RGW0232;
SD3035RGW0232; SD0420RGW0233; SD0425RGW0233; SD0430RGW0233; SD0435RGW0233;
SD0720RGW0233; SD0725RGW0233; SD0730RGW0233; SD0735RGW0233; SD1020RGW0233;
SD1025RGW0233; SD1030RGW0233; SD1035RGW0233; SD1520RGW0233; SD1525RGW0233;
SD1530RGW0233; SD1535RGW0233; SD3020RGW0233; SD3025RGW0233; SD3030RGW0233;
SD3035RGW0233; SD0420RGW0241; SD0425RGW0241; SD0430RGW0241; SD0435RGW0241;
SD0720RGW0241; SD0725RGW0241; SD0730RGW0241; SD0735RGW0241; SD1020RGW0241;
SD1025RGW0241; SD1030RGW0241; SD1035RGW0241; SD1520RGW0241; SD1525RGW0241;
SD1530RGW0241; SD1535RGW0241; SD3020RGW0241; SD3025RGW0241; SD3030RGW0241;
SD3035RGW0241; SD0420RGW0242; SD0425RGW0242; SD0430RGW0242; SD0435RGW0242;

SD0720RGW0242; SD0725RGW0242; SD0730RGW0242; SD0735RGW0242; SD1020RGW0242; SD1025RGW0242; SD1030RGW0242; SD1035RGW0242; SD1520RGW0242; SD1525RGW0242; SD1530RGW0242; SD1535RGW0242; SD3020RGW0242; SD3025RGW0242; SD3030RGW0242; SD3035RGW0242; SD0420RGW0244; SD0425RGW0244; SD0430RGW0244; SD0435RGW0244; SD0720RGW0244; SD0725RGW0244; SD0730RGW0244; SD0735RGW0244; SD1020RGW0244; SD1025RGW0244; SD1030RGW0244; SD1035RGW0244; SD1520RGW0244; SD1525RGW0244; SD1530RGW0244; SD1535RGW0244; SD3020RGW0244; SD3025RGW0244; SD3030RGW0244;SD3035RGW0244; SD0420RGW0245; SD0425RGW0245; SD0430RGW0245; SD0435RGW0245; SD0720RGW0245; SD0725RGW0245; SD0730RGW0245; SD0735RGW0245; SD1020RGW0245; SD1025RGW0245; SD1030RGW0245; SD1035RGW0245; SD1520RGW0245; SD1525RGW0245; SD1530RGW0245; SD1535RGW0245; SD3020RGW0245; SD3025RGW0245; SD3030RGW0245; SD3035RGW0245; PD0420N; PD0425N; PD0430N; PD0435N; PD00720N; PD0725N; PD0730N; PD0735N; PD1020N; PD1025N; PD1030N; PD1035N; PD1520N; PD1525N; PD1530N; PD1535N;PD3020N; PD3025N; PD3030N; PD3035N; PD0420NGW0206; PD0425NGW0206; PD0430NGW0206; PD0435NGW0206; PD0720NGW0206; PD0725NGW0206; PD0730NGW0206; PD0735NGW0206; PD1020NGW0206; PD1025NGW0206; PD1030NGW0206; PD1035NGW0206; PD1520NGW0206; PD1525NGW0206; PD1530NGW0206; PD1535NGW0206; PD3020NGW0206; PD3025NGW0206; PD3030NGW0206; PD3035NGW0206; PD0420NGW0209; PD0425NGW0209; PD0430NGW0209; PD0435NGW0209; PD0720NGW0209; PD0725NGW0209; PD0730NGW0209; PD0735NGW0209; PD1020NGW0209; PD1025NGW0209; PD1030NGW0209; PD1035NGW0209; PD1520NGW0209; PD1525NGW0209; PD1530NGW0209; PD1535NGW0209; PD3020NGW0209; PD3025NGW0209; PD3030NGW0209; PD3035NGW0209; PD0420NGW0204; PD0425NGW0204; PD0430NGW0204; PD0435NGW0204; PD0720NGW0204; PD0725NGW0204; PD0730NGW0204; PD0735NGW0204; PD1020NGW0204; PD1025NGW0204; PD1030NGW0204; PD1035NGW0204; PD1520NGW0204; PD1525NGW0204; PD1530NGW0204; PD1535NGW0204; PD3020NGW0204; PD3025NGW0204; PD3030NGW0204; PD3035NGW0204; PD0420NGW0208; PD0425NGW0208; PD0430NGW0208; PD0435NGW0208; PD0720NGW0208; PD0720NGW0208; PD0730NGW0208; PD0735NGW0208; PD1020NGW0208; PD1025NGW0208; PD1030NGW0208; PD1035NGW0208; PD1520NGW0208; PD1525NGW0208; PD1530NGW0208; PD1535NGW0208; PD3020NGW0208; PD3025NGW0208; PD3030NGW0208; PD3035NGW0208; PD0420NGW0217; PD0425NGW0217; PD0430NGW0217; PD0435NGW0217; PD0720NGW0217; PD0725NGW0217; PD0730NGW0217; PD0735NGW0217; PD1020NGW0217; PD1025NGW0217;PD1030NGW0217; PD1035NGW0217; PD1520NGW0217; PD1525NGW0217; PD1530NGW0217; PD1535NGW0217; PD3020NGW0217; PD3025NGW0217; PD3030NGW0217; PD3035NGW0217; PD0420NGW0218; PD0425NGW0218; PD0430NGW0218; PD0435NGW0218; PD0720NGW0218; PD0725NGW0218; PD0730NGW0218; PD0735NGW0218; PD1020NGW0218; PD1025NGW0218; PD1030NGW0218; PD1035NGW0218; PD1520NGW0218; PD1525NGW0218; PD1530NGW0218; PD1535NGW0218; PD3020NGW0218; PD3025NGW0218; PD3030NGW0218; PD3035NGW0218; PD0420NGW0220; PD0425NGW0220; PD0430NGW0220; PD0435NGW0220; PD0720NGW0220; PD0725NGW0220; PD0730NGW0220; PD0735NGW0220; PD1020NGW0220; PD1025NGW0220; PD1030NGW0220; PD1035NGW0220; PD1520NGW0220; PD1525NGW0220; PD1530NGW0220; PD1535NGW0220; PD3020NGW0220; PD3025NGW0220; PD3030NGW0220; PD3035NGW0220; PD0420NGW0221; PD0425NGW0221; PD0430NGW0221; PD0435NGW0221; PD0720NGW0221; PD0725NGW0221; PD0730NGW0221; PD0735NGW0221; PD1020NGW0221; PD1025NGW0221; PD1030NGW0221; PD1035NGW0221; PD1520NGW0221; PD1525NGW0221; PD1530NGW0221; PD1535NGW0221; PD3020NGW0221; PD3025NGW0221; PD3030NGW0221; PD3035NGW0221; PD0420NGW0228; PD0425NGW0228;

PD0430NGW0228; PD0435NGW0228; PD0720NGW0228; PD0725NGW0228; PD0730NGW0228;
PD0735NGW0228; PD1020NGW0228; PD1025NGW0228; PD1030NGW0228; PD1035NGW0228;
PD1520NGW0228; PD1525NGW0228; PD1530NGW0228; PD1535NGW0228; PD3020NGW0228;
PD3025NGW0228; PD3030NGW0228; PD3035NGW0228; PD0420NGW0230; PD0425NGW0230;
PD0430NGW0230; PD0435NGW0230; PD0720NGW0230; PD0725NGW0230; PD0730NGW0230;
PD0735NGW0230; PD1020NGW0230; PD1025NGW0230; PD1030NGW0230; PD1035NGW0230;
PD1520NGW0230; PD1525NGW0230; PD1530NGW0230; PD1535NGW0230; PD3020NGW0230;
PD3025NGW0230; PD3030NGW0230; PD3035NGW0230; PD0420NGW0232; PD0425NGW0232;
PD0430NGW0232; PD043SNGW0232; PD0720NGW0232; PD0725NGW0232; PD0730NGW0232;
PD0735NGW0232; PD1020NGW0232; PD1025NGW0232; PD1030NGW0232; PD1035NGW0232;
PD1520NGW0232; PD1525NGW0232; PD1530NGW0232; PD1535NGW0232; PD3020NGW0232;
PD3025NGW0232; PD3030NGW0232; PD3035NGW0232; PD0420NGW0233; PD0425NGW0233;
PD0430NGW0233; PD0435NGW0233; PD0720NGW0233; PD0725NGW0233; PD0730NGW0233;
PD0735NGW0233; PD1020NGW0233; PD1025NGW0233; PD1030NGW0233; PD1035NGW0233;
PD1520NGW0233; PD1525NGW0233; PD1530NGW0233; PD1535NGW0233; PD3020NGW0233;
PD3025NGW0233; PD3030NGW0233; PD303SNGW0233;PD0420NGW0241; PD0425NGW0241;
PD0430NGW0241; PD0435NGW0241; PD0720NGWE241; PD0725NGW0241; PD0730NGW0241;
PD0735NGW0241; PD1020NGW0241; PD1025NGW0241; PD1030NGW0241; PD1035NGW0241;
PD1520NGW0241; PD1525NGW0241; PD1530NGWE241; PD1535NGW0241; PD3020NGW0241;
PD3025NGW0241; PD3030NGW0241; PD3035NGW0241; PD0420NGW0242; PD0425NGW0242;
PD0430NGW0242; PD043SNGW0242; PD0720NGW0242; PD0725NGW0242; PD0730NGW0242;
PD0735NGW0242; PD1020NGW0242; PD102SNGW0242; PD1030NGW0242; PD1035NGW0242;
PD1520NGW0242; PD1525NGW0242; PD1S30NGW0242; PD1535NGW0242; PD3020NGW0242;
PD3025NGW0242; PD3030NGW0242; PD3035NGW0242; PD0420NGW0244; PD0425NGW0244;
PD0430NGW0244; PD0435NGW0244; PD0720NGW0244; PD0725NGW0244; PD0730NGW0244;
PD0735NGW0244; PD1020NGW0244; PD1025NGW0244; PD1030NGW0244; PD103SNGW0244;
PD1520NGW0244; PD1525NGW0244; PD1530NGW0244; PD1535NGW0244; PD3020NGW0244;
PD3025NGW0244; PD3030NGW0244; PD3035NGW0244; PD0420NGW0245; PD0425NGW0245;
PD0430NGW0245; PD0435NGW0245; PD0720NGW0245; PD0725NGW0245; PD0730NGW0245;
PD0735NGW0245; PD1020NGW0245; PD1025NGW0245; PD1030NGW0245; PD103ENGW0245;
PD1520NGW0245; PD1525NGW0245; PD1530NGW0245; PD1535NGW0245; PD3020NGW0245;
PD3025NGW0245; PD3030NGW0245; PD3035NGW0245; PD0420R; PD0425R; PD0430R; PD0435R;
PD0720R; PD0725R; PD0730R; PD0735R; PD1020R; PD1025R; PD1030R; PD1035R; PD1520R; PD1525R;
PD1530R; PD1535R; PD3020R; PD3025R; PD3030R; P03035R; PD0420RGW0206; PD0425RGW0206;
PD0430RGW0206; PD0435RGW0206; PD0720RGW0206; PD0725RGW0206; PD0730RGW0206;
PD0735RGW0206; PD1020RGW0206; PD1025RGW0206; PD1030RGW0206; PD1035RGW0206;
PD1520RGW0206; PD1525RGW0206; PD1530RGW0206; PD1535RGW0206; PD3020RGW0206;
PD3025RGW0206; PD3030RGW0206; PD3035RGW0206; PD0420RGW0209; PD0425RGW0209;
PD0430RGW0209; PD0435RGW0209; PD0720RGW0209; PD0725RGW0209; PD0730RGW0209;
PD0735RGW0209; PD1020RGW0209; PD1025RGW0209; PD1030RGW0209; PD1035RGW0209;
PD1520RGW0208; PD1525RGW0209; PD1530RGW0209; PD1535RGW0209; PD3020RGW0209;
PD3025RGW0209; PD3030RGW0209; PD3035RGW0209; PD0420RGW0204; PD0425RGW0204;
PD0430RGW0204; PD0435RGW0204; PD0720RGW0204; PD0725RGW0204; PD0730RGW0204;
PD0735RGW0204; PD1020RGW0204; PD1025RGW0204; PD1030RGW0204; PD1035RGW0204;
PD1520RGW0204; PD1525RGW0204; PD1530RGW0204; PD1535RGW0204;
PD3020RGW0204;PD3025RGW0204; PD3030RGW0204; PD3035RGW0204; PD0420RGW0208;

PD0425RGW0208; PD0430RGW0208; PD0435RGW0208; PD0720RGW0208; PD0720RGW0208; PD0730RGW0208; PD0735RGW0208; PD1020RGW0208; PD1025RGW0208; PD1030RGW0208; PD1035RGW0208; PD1520RGW0208; PD1525RGW0208; PD1530RGW0208; PD1535RGW0208; PD3020RGW0208; PD3025RGW0208; PD3030RGW0208; PD3035RGW0208; PD0420RGW0217; PD0425RGW0217; PD0430RGW0217; PD0435RGW0217; PD0720RGW0217; PD0725RGW0217; PD0730RGW0217; PD0735RGW0217; PD1020RGW0217; PD1025RGW0217; PD1030RGW0217; PD1035RGW0217; PD1520RGW0217; PD1525RGW0217; PD1530RGW0217; PD1535RGW0217; PD3020RGW0217; PD3025RGW0217; PD3030RGW0217; PD3035RGW0217; PD0420RGW0218; PD0425RGW0218; PD0430RGW0218; PD0435RGW0218; PD0720RGW0218; PD0725RGW0218; PD0730RGW0218; PD0735RGW0218; PD1020RGW0218; PD1025RGW0218; PD1030RGW0218; PD1035RGW0218; PD1520RGW0218; PD1525RGW0218; PD1530RGW0218; PD1535RGW0218; PD3020RGW0218; PD3025RGW0218; PD3030RGW0218; PD3035RGW0218; PD0420RGW0220; PD0425RGW0220; PD0430RGW0220; PD0435RGW0220; PD0720RGW0220; PD0725RGW0220; PD0730RGW0220; PD0735RGW0220; PD1020RGW0220; PD1025RGW0220; PD1030RGW0220; PD1035RGW0220; PD1520RGW0220; PD1525RGW0220; PD1530RGW0220; PD1535RGW0220; PD3020RGW0220; PD3025RGW0220; PD3030RGW0220; PD3035RGW0220; PD0420RGW0221; PD0425RGW0221; PD0430RGW0221; PD0435RGW0221; PD0720RGW0221; PD0725RGW0221; PD0730RGW0221; PD0735RGW0221; PD1020RGW0221; PD1025RGW0221; PD1030RGW0221; PD1035RGW0221; PD1520RGW0221; PD1525RGW0221; PD1530RGW0221; PD1535RGW0221; PD3020RGW0221; PD3025RGW0221; PD3030RGW0221; PD3035RGW0221; PD0420RGW0228; PD0425RGW0228; PD0430RGW0228; PD0435RGW0228; PD0720RGW0228; PD0725RGW0228; PD0730RGW0228; PD0735RGW0228; PD1020RGW0228; PD1025RGW0228; PD1030RGW0228; PD1035RGW0228; PD1520RGW0228; PD1525RGW0228; PD1530RGW0228; PD1535RGW0228; PD3020RGW0228; PD3025RGW0228; PD3030RGW0228; PD3035RGW0228; PD0420RGW0230; PD0425RGW0230; PD0430RGW0230; PD0435RGW0230; PD0720RGW0230; PD0725RGW0230; PD0730RGW0230; PD0735RGW0230; PD1020RGW0230; PD1025RGW0230; PD1030RGW0230; PD1035RGW0230; PD1520RGW0230; PD1525RGW0230; PD1530RGW0230; PD1535RGW0230; PD3020RGW0230; PD3025RGW0230; PD3030RGW0230; PD3035RGW0230; PD0420RGW0232; PD0425RGW0232; PD0430RGW0232; PD0435RGW0232; PD0720RGW0232; PD0725RGW0232; PD0730RGW0232;PD0735RGW0232; PD1020RGW0232; PD1025RGW0232; PD1030RGW0232; PD1035RGW0232; PD1520RGW0232; PD1525RGW0232; PD1530RGW0232; PD1535RGW0232; PD3020RGW0232; PD3025RGW0232; PD3030RGW0232; PD3035RGW0232; PD0420RGW0233; PD0425RGW0233; PD0430RGW0233; PD0435RGW0233; PD0720RGW0233; PD0725RGW0233; PD0730RGW0233; PD0735RGW0233; PD1020RGW0233; PD1025RGW0233; PD1030RGW0233; PD1035RGW0233; PD1520RGW0233; PD1525RGW0233; PD1530RGW0233; PD1535RGW0233; PD3020RGW0233; PD3025RGW0233; PD3030RGW0233; PD3035RGW0233; PD0420RGW0241; PD0425RGW0241; PD0430RGW0241; PD0435RGW0241; PD0720RGW0241; PD0725RGW0241; PD0730RGW0241; PD0735RGW0241; PD1020RGW0241; PD1025RGW0241; PD1030RGW0241; PD1035RGW0241; PD1520RGW0241; PD1525RGW0241; PD1530RGW0241; PD1535RGW0241; PD3020RGW0241; PD3025RGW0241; PD3030RGW0241; PD3035RGW0241; PD0420RGW0242; PD0425RGW0242; PD0430RGW0242; PD0435RGW0242; PD0720RGW0242; PD0725RGW0242; PD0730RGW0242; PD0735RGW0242; PD1020RGW0242; PD1025RGW0242; PD1030RGW0242; PD1035RGW0242; PD1520RGW0242; PD1525RGW0242; PD1530RGW0242; PD1535RGW0242; PD3020RGW0242; PD3025RGW0242; PD3030RGW0242; PD3035RGW0242; PD0420RGW0244; PD0425RGW0244; PD0430RGW0244; PD0435RGW0244; PD0720RGW0244; PD0725RGW0244; PD0730RGW0244; PD0735RGW0244; PD1020RGW0244; PD1025RGW0244; PD1030RGW0244;

PD1035RGW0244; PD1520RGW0244; PD1525RGW0244; PD1530RGW0244; PD1535RGW0244;
PD3020RGW0244; PD3025RGW0244; PD3030RGW0244; PD3035RGW0244; PD0420RGW0245;
PD0425RGW0245; PD0430RGW0245; PD0435RGW0245; PD0720RGW0245; PD0725RGW0245;
PD0730RGW0245; PD0735RGW0245; PD1020RGW0245; PD10?5RGW0245; PD1030RGW0245;
PD1035RGW0245; PD1520RGW0245; PD1525RGW0245; PD1530RGW0245; PD1535RGW0245;
PD3020RGW0245; PD3025RGW0245; PD3030RGW0245; PD3035RGW0245; PT0420N; PT0425N; PT0430N;
PT0435N; PT0720N; PT0725N; PT0730N; PT0735N; PT1020N; PT1025N; PT1030N; PT1035N; PT1520N;
PT1525N; PT1530N, PT1535N; PT3020N; PT3025N; PT3030N; PT3035N; PT0420NGW0206;
PT0425NGW0206; PT0430NGW0206; PT0435NGW0206; PT0720NGW0206; PT0725NGW0206;
PT0730NGW0206; PT0735NGW0206; PT1020NGW0206; PT1025NGW0206; PT1030NGW0206;
PT1035NGW0206; PT1520NGW0206; PT1525NGW0206; PT1530NGW0206; PT1535NGW0206;
PT3020NGW0206; PT3035NGW0206; PT3030NGW0206; PT3035NGW0206; PT0420NGW0209;
PT0425NGW0209; PT0430NGW0209; PT0435NGW0209;PT0720NGW0209; PT0725NGW0209;
PT0730NGW0209; PT0735NGW0209; PT1020NGW0209; PT1025NGW0209; PT1030NGW0209;
PT1035NGW0209; PT1520NGW0209; PT1525NGW0209; PT1530NGW0209; PT1535NGW0209;
PT3020NGW0209; PT3025NGW0209; PT3030NGW0209; PT3035NGW0209; PT0420NGW0204;
PT0425NGW0204; PT0430NGW0204; PT0435NGW0204; PT0720NGW0204; PT0725NGW0204;
PT0730NGW0204; PT0735NGW0204; PT1020NGW0204; PT1025NGW0204; PT1030NGW0204;
PT1035NGW0204; PT1520NGW0204; PT1525NGW0204; PT1530NGW0204; PT1535NGW0204;
PT3020NGW0204; PT3025NGW0204; PT3030NGW0204; PT3035NGW0204; PT0420NGW0208;
PT0425NGW0208; PT0430NGW0208; PT0435NGW0208; PT0720NGW0208; PT0720NGW0208;
PT0730NGW0208; PT0735NGW0208; PT1020NGW0208; PT1025NGW0208; PT1030NGW0208;
PT1035NGW0208; PT1520NGW0208; PT1525NGW0208; PT1530NGW0208; PT1535NGW0208;
PT3020NGW0208; PT3025NGW0208; PT3030NGW0208; PT3035NGW0208; PT0420NGW0217;
PT0425NGW0217; PT0430NGW0217; PT0435NGW0217; PT0720NGW0217; PT0725NGW0217;
PT0730NGW0217; PT0735NGW0217; PT1020NGW0217; PT1025NGW0217; PT1030NGW0217;
PT1035NGW0217; PT1520NGW0217; PT1525NGW0217; PT1530NGW0217; PT1535NGW0217;
PT3020NGW0217; PT3025NGW0217; PT3030NGW0217; PT3035NGW0217; PT0420NGW0218;
PT0425NGW0218; PT0430NGW0218; PT0435NGW0218; PT0720NGW0218; PT0725NGW0218;
PT0730NGW0218; PT0735NGW0218; PT1020NGW0218; PT1025NGW0218; PT1030NGW0218;
PT1035NGW0218; PT1520NGW0218; PT1525NGW0218; PT1530NGW0218; PT1535NGW0218;
PT3020NGW0218; PT3025NGW0218; PT3030NGW0218; PT3035NGW0218; PT0420NGW0220;
PT0425NGW0220; PT0430NGW0220; PT0435NGW0220; PT0720NGW0220; PT0725NGW0220;
PT0730NGW0220; PT0725NGW0220; PT1020NGW0220; PT1025NGW0220; PT1030NGW0220;
PT1035NGW0220; PT1520NGW0220; PT1525NGW0220; PT1530NGW0220; PT1535NGW0220;
PT3020NGW0220; PT3025NGW0220; PT3030NGW0220; PT3035NGW0220; PT0420NGW0221;
PT0425NGW0221; PT0430NGW0221; PT0435NGW0221; PT0720NGW0221; PT0725NGW0221;
PT0730NGW0221; PT0735NGW0221; PT1020NGW0221; PT1025NGW0221; PT1030NGW0221;
PT1035NGW0221; PT1520NGW0221; PT1525NGW0221; PT1530NGW0221; PT1535NGW0221;
PT3020NGW0221; PT3025NGW0221; PT3030NGW0221; PT3035NGW0221; PT0420NGW0228;
PT0425NGW0228; PT0430NGW0228; PT0435NGW0228; PT0720NGW0228; PT0725NGW0228;
PT0735NGW0228; PT0735NGW0228; PT1020NGW0228; PT1025NGW0228; PT1030NGW0228;
PT1035NGW0228; PT1520NGW0228; PT1525NGW0228;PT1530NGW0228; PT1535NGW0228;
PT3020NGW0228; PT3025NGW0228; PT3030NGW0228; PT3035NGW0228; PT0420NGW0230;
PT0425NGW0230; PT0430NGW0230; PT0435NGW0230; PT0720NGW0230; PT0725NGW0230;
PT0730NGW0230; PT0735NGW0230; PT1020NGW0230; PT1025NGW0230; PT1030NGW0230;

PT1035NGW0230; PT1520NGW0230; PT1525NGW0230; PT1530NGW0230; PT1535NGW0230;
PT3020NGW0230; PT3025NGW0230; PT3030NGW0230; PT3035NGW0230; PT0420NGW0232;
PT0425NGW0232; PT0430NGW0232; PT0435NGW0232; PT0720NGW0232; PT0725NGW0232;
PT0730NGW0232; PT0735NGW0232; PT1020NGW0232; PT1025NGW0232; PT1030NGW0232;
PT1035NGW0232; PT1520NGW0232; PT1525NGW0232; PT1530NGW0232; PT1535NGW0232;
PT3020NGW0232; PT3025NGW0232; PT3030NGW0232; PT3035NGW0232; PT0420NGW0233;
PT0425NGW0233; PT0430NGW0233; PT0435NGW0233; PT0720NGW0233; PT0725NGW0233;
PT0730NGW0233; PT0735NGW0233; PT1020NGW0233; PT1025NGW0233; PT1030NGW0233;
PT1035NGW0233; PT1520NGW0233; PT1525NGW0233; PT1530NGW0233; PT1535NGW0233;
PT3020NGW0233; PT3025NGW0233; PT3030NGW0233; PT3035NGW0233; PT0420NGW0241;
PT0425NGW0241; PT0430NGW0241; PT0435NGW0241; PT0720NGW0241; PT0725NGW0241;
PT0730NGW0241; PT0735NGW0241; PT1020NGW0241; PT1025NGW0241; PT1030NGW0241;
PT1035NGW0241; PT1520NGW0241; PT1525NGW0241; PT1530NGW0241; PT1535NGW0241;
PT3020NGW0241; PT3025NGW0241; PT3030NGW0241; PT3035NGW0241; PT0420NGW0242;
PT0425NGW0242; PT0430NGW0242; PT0435NGW0242; PT0720NGW0242; PT0725NGW0242;
PT0730NGW0242; PT0735NGW0242; PT1020NGW0242; PT1025NGW0242; PT1030NGW0242;
PT1035NGW0242; PT1520NGW0242; PT1525NGW0242; PT1530NGW0242; PT1535NGW0242;
PT3020NGW0242; PT3025NGW0242; PT3030NGW0242; PT3035NGW0242; PT0420NGW0244;
PT0425NGW0244; PT0430NGW0244; PT0435NGW0244; PT0720NGW0244; PT0725NGW0244;
PT0730NGW0244; PT0735NGW0244; PT1020NGW0244; PT1025NGW0244; PT1030NGW0244;
PT1035NGW0244; PT1520NGW0244; PT1525NGW0244; PT1530NGW0244; PT1535NGW0244;
PT3020NGW0244; PT3025NGW0244; PT3030NGW0244; PT3035NGW0244; PT0420NGW0245;
PT0425NGW0245; PT0430NGW0245; PT0435NGW0245; PT0720NGW0245; PT0725NGW0245;
PT0730NGW0245; PT0735NGW0245; PT1020NGW0245; PT1025NGW0245; PT1030NGW0245;
PT1035NGW0245; PT1520NGW0245; PT1525NGW0245; PT1530NGW0245; PT1535NGW0245;
PT3020NGW0245; PT3025NGW0245; PT3030NGW0245; PT3035NGW0245; PT0420R; PT0425R; PT0430R;
PT0435R; PT0720R; PT0725R; PT0730R;PT0735R; PT1020R; PT1025R; PT1030R; PT1035R; PT1520R;
PT1525R; PT1530R; PT1535R; PT3020R; PT3025R; PT3030R; PT3035R; PT0420RGW0206;
PT0425RGW0206; PT0430RGW02086; PT0435RGW0206; PT0720RGW0206; PT0725RGW0206;
PT0730RGW0206; PT0735RGW0206; PT1020RGW0206; PT1025RGW0206; PT1030RGW0206;
PT1035RGW0206; PT1520RGW0206; PT1525RGW0206; PT1530RGW0206; PT1535RGW0206;
PT3020RGW0206; PT3025RGW0206; PT3030RGW0206; PT3035RGW0206; PT0420RGW0209;
PT0425RGW0209; PT0430RGW0209; PT0435RGW0209; PT0720RGW0209; PT0725RGW0209;
PT0730RGW0209; PT0735RGW0209; PT1020RGW0209; PT1025RGW0209; PT1030RGW0209;
PT1035RGW0209; PT1520RGW0209; PT1525RGW0209; PT1530RGW0209; PT1535RGW0209;
PT3020RGW0209: PT3025RGW0209; PT3030RGW0209; PT3035RGW0209; PT0420RGW0204;
PT0425RGW0204; PT0430RGW0204; PT0435RGW0204; PT0720RGW0204; PT0725RGW0204;
PT0730RGW0204; PT0735RGW0204; PT1020RGW0204; PT1025RGW0204; PT1030RGW0204;
PT1035RGW0204; PT1520RGW0204; PT1525RGW0204; PT1530RGW0204; PT1535RGW0204;
PT3020RGW0204; PT3025RGW0204; PT3030RGW0204; PT3035RGW0204; PT0420RGW0208;
PT0425RGW0208; PT0430RGW0208; PT0435RGW0208; PT0720RGW0208; PT0720RGW0208;
PT0730RGW0208; PT0735RGW0208; PT1020RGW0208; PT1025RGW0208; PT1030RGW0208;
PT1035RGW0208; PT1520RGW0208; PT1525RGW0208; PT1530RGW0208; PT1535RGW0208;
PT3020RGW0208; PT3025RGW0208; PT3030RGW0208; PT3035RGW0208; PT0420RGW0217;
PT0425RGW0217; PT0430RGW0217; PT0435RGW0217; PT0720RGW0217; PT0725RGW0217;
PT0730RGW0217; PT0735RGW0217; PT1020RGW0217; PT1025RGW0217; PT1030RGW0217;

PT1035RGW0217; PT1520RGW0217; PT1525RGW0217; PT1530RGW0217; PT1535RGW0217;
PT3020RGW0217; PT3025RGW0217; PT3030RGW0217; PT3035RGW0217; PT0420RGW0218;
PT0425RGW0218; PT0430RGW0218; PT0435RGW0218; PT0720RGW0218; PT0725RGW0218;
PT0730RGW0218; PT8735RGW0218; PT1020RGW0218; PT1025RGW0218; PT1030RGW0218;
PT1035RGW0218; PT1520RGW0218; PT1525RGW0218; PT1530RGW0218; PT1535RGW0218;
PT3020RGW0218; PT3025RGW0218; PT3030RGW0218; PT3035RGW0218; PT0420RGW0220;
PT0425RGW0220; PT0430RGW0220; PT0435RGW0220; PT0720RGW0220; PT0725RGW0220;
PT0730RGW0220; PT0735RGW0220; PT1020RGW0220; PT1025RGW0220; PT1030RGW0220;
PT1035RGW0220; PT1520RGW0220; PT1525RGW0220; PT1530RGW0220; PT1535RGW0220;
PT3020RGW0220; PT3025RGW0220; PT3030RGW0220; PT3035RGW0220; PT0420RGW0221;
PT0425RGW0221;PT0430RGW0221; PT0435RGW0221; PT0720RGW0221; PT0725RGW0221;
PT0730RGW0221; PT0735RGW0221; PT1020RGW0221; PT1025RGW0221; PT1030RGW0221;
PT1035RGW0221; PT1520RGW0221; PT1525RGW0221; PT1530RGW0221; PT1535RGW0221;
PT3020RGW0221; PT3025RGW0221; PT3030RGW0221; PT3035RGW0221; PT0420RGW0228;
PT0425RGW0228; PT0430RGW0228; PT0435RGW0228; PT0720RGW0228; PT0725RGW0228;
PT0730RGW0228; PT0735RGW0228; PT1020RGW0228; PT1025RGW0228; PT1030RGW0228;
PT1045RGW0228; PT1520RGW0228; PT1525RGW0228; PT1530RGW0228; PT1535RGW0228;
PT3020RGW0228; PT3025RGW0228; PT3030RGW0228; PT3035RGW0228; PT0420RGW0230;
PT0425RGW0230; PT0430RGW0230; PT0435RGW0230; PT0720RGW0230; PT0725RGW0230;
PT0730RGW0230; PT0735RGW0230; PT1020RGW0230; PT1025RGW0230; PT1030RGW0230;
PT1035RGW0230; PT1520RGW0230; PT1525RGW0230; PT1530RGW0230; PT1535RGW0230;
PT3020RGW0230; PT3025RGW0230; PT3030RGW0230; PT3035RGW0230; PT0420RGW0232;
PT0425RGW0232; PT0430RGW0232; PT0435RGW0232; PT0720RGW0232; PT0725RGW0232;
PT0730RGW0232; PT0735RGW0232; PT1020RGW0232; PT1025RGW0232; PT1030RGW0232;
PT1035RGW0232; PT1520RGW0232; PT1525RGW0232; PT1530RGW0232; PT1535RGW0232;
PT3020RGW0232; PT3025RGW0232; PT3030RGW0232; PT3035RGW0232; PT0420RGWE233;
PT0425RGWE233; PT0430RGW0233; PT0435RGW0233; PT0720RGW0233; PT0725RGWE233;
PT0730RGWE233; PT0735RGW0233; PT1020RGW0233; PT1025RGW0233; PT1030RGW0233;
PT1035RGW0233; PT1520RGW0233; PT1525RGW0233; PT1530RGW0233; PT1535RGW0235;
PT3020RGW0233; PT3025RGW0233; PT3030RGW0233; PT3035RGW0233; PT0420RGW0241;
PT0725RGW0241; PT0430RGW0241; PT0435RGW0241; PT0720RGW0241; PT0725RGW0241;
PT0730RGW0241; PT0735RGW0241; PT1020RGW0241; PT1025RGW0241; PT1030RGW0241;
PT1035RGW0241; PT1520RGW0241; PT1525RGW0241; PT1530RGW0241; PT1535RGW0241;
PT3020RGW0241; PT3025RGW0241; PT3030RGW0241; PT3035RGW0241; PT0420RGW0242;
PT0425RGW0242; PT0430RGW0242; PT0435RGW0242; PT0720RGW0242; PT0725RGW0242;
PT0730RGW0242; PT0735RGW0242; PT1020RGW0242; PT1025RGW0242; PT1030RGW0242;
PT1035RGW0242, PT1520RGW0242; PT1525RGW0242; PT1530RGW0242; PT1535RGW0242;
PT3020RGW0242; PT3025RGW0242; PT3030RGW0242; PT3035RGW0242; PT0420RGW0244;
PT0425RGW0244; PT0430RGW0244; PT0435RGW0244; PT0720RGW0244; PT0725RGW0244;
PT0730RGW0244; PT0735RGW0244; PT1020RGW0244; PT1025RGW0244; PT1030RGW0244;
PT1035RGW0244;PT1520RGW0244; PT1525RGW0244; PT1530RGW0244; PT1535RGW0244;
PT3020RGW0244; PT3025RGW0244; PT3030RGW0244; PT3035RGW0244; PT0420RGW0245;
PT0425RGW0245; PT0430RGW0245; PT0435RGW0245; PT0720RGW0245; PT0725RGW0245;
PT0730RGW0245; PT0735RGW0245; PT1020RGW0245; PT1025RGW0245; PT1030RGW0245;
PT1035RGW0245; PT1520RGW0245; PT1525RGW0245; PT1530RGW0245; PT1535RGW0245;
PT3020RGW0245; PT3025RGW0245; PT3030RGW0245; PT3035RGW0245

Clase de Riesgo: III

Indicación/es autorizada/s:
Este dispositivo se utiliza para la canulación del sistema ductal y para la esfinterotomía.

Período de vida útil: 3 años

Condición de uso: Uso exclusivo a profesionales e instituciones sanitarias

Fuente de obtención de la materia prima de origen biológico: No Aplica

Forma de presentación: Por Unidad

Método de esterilización: Oxido de etileno

Nombre del fabricante:
Leo Medical Co., Ltd.

Lugar de elaboración:
1st and 2nd Floor, No. 10 Building, 18 Huashan Road, 213022 Changzhou City, Jiangsu Province, República Popular China

Se extiende el presente Certificado de Autorización e Inscripción del PM 1737-37 , con una vigencia cinco (5) años a partir de la fecha de la Disposición autorizante.

Expediente N° 1-0047-3110-000229-24-4

N° Identificatorio Trámite: 55838

AM

Digitally signed by PEARSON Enriqueta María
Date: 2024.02.14 17:43:54 ART
Location: Ciudad Autónoma de Buenos Aires

Enriqueta Maria Pearson
Subadministradora Nacional
Administración Nacional de Medicamentos, Alimentos y Tecnología Médica

Digitally signed by GESTION DOCUMENTAL ELECTRONICA - GDE
Date: 2024.02.14 17:43:56 -03:00